NGA-286

DC-6000 MHz, Cascadable GaAs HBT MMIC Amplifier

OBSOLETE

See Application Note AN-059 for Alternates

Product Description

Sirenza Microdevices' NGA-286 is a high performance Gallium Arsenide Heterojunction Bipolar Transistor MMIC Amplifier. Designed with InGaP process technology for improved reliability, a Darlington configuration is utilized for broadband performance up to 6 Ghz. The heterojunction increases breakdown voltage and minimizes leakage current between junctions. Cancellation of emitter junction non-linearities results in higher suppression of intermodulation products.

Small Signal Gain vs. Frequency

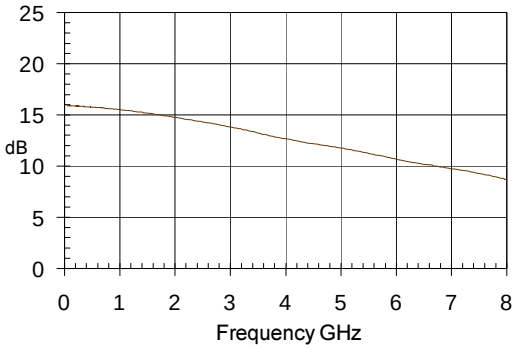

Product Features

- High Gain: 14.8dB at 1950Mhz
- Cascadable 50 ohm: 1.3:1 VSWR
- Operates from Single Supply
- Low Thermal Resistance Package
- Unconditionally Stable

Applications

- PA Driver Amplifier
- Cellular, PCS, GSM, UMTS
- IF Amplifier
- Wireless Data, Satellite

Symbol	Parameter	Units	Frequency	Min.	Typ.	Max.
P_{1dB}	Output Power at 1dB Compression	dBm	850 MHz 1950 MHz 2400 MHz		15.2 15.2 15.5	
OIP_3	Output Third Order Intercept Point	dBm	850 MHz 1950 MHz 2400 MHz		32.0 31.4 30.9	
G	Small Signal Gain	dB	850 MHz 1950 MHz 2400 MHz		15.6 14.8 14.4	
Bandwidth	Determined by Return Loss (>10dB)	MHz			3800	
	Input VSWR	-	DC - 5000 MHz		1.3:1	
	Output VSWR	-	DC - 5000 MHz		1.3:1	
NF	Noise Figure	dB	2000 MHz		3.4	
V_D	Device Operating Voltage	V			4.0	
I_D	Device Operating Current	mA		45	50	55
R_{TH}, j-l	Thermal Resistance (junction to lead)	°C/W			120	

Test Conditions: V_S = 8 V, R_{BIAS} = 75 Ohms; I_D = 50 mA Typ., T_L = 25ºC; OIP_3 Tone Spacing = 1 MHz, Pout per tone = 0 dBm, $Z_S = Z_L$ = 50 Ohms

522 Almanor Ave., Sunnyvale, CA 94085 Phone: (800) SMI-MMIC http://www.sirenza.com

Key parameters, at typical operating frequencies:

Parameter	Typical 25ºC	Unit	Test Condition (I_D = 50mA, unless otherwise noted)
500 MHz			
Gain	15.8	dB	Tone spacing = 1 MHz, Pout per tone = 0dBm
Output IP3	31.8	dBm	
Output P1dB	15.3	dBm	
Input Return Loss	21.0	dB	
Isolation	18.8	dB	
850 MHz			
Gain	15.6	dB	Tone spacing = 1 MHz, Pout per tone = 0dBm
Output IP3	32.0	dBm	
Output P1dB	15.2	dBm	
Input Return Loss	20.0	dB	
Isolation	18.8	dB	
1950 MHz			
Gain	14.8	dB	Tone spacing = 1 MHz, Pout per tone = 0dBm
Output IP3	31.4	dBm	
Output P1dB	15.2	dBm	
Input Return Loss	17.1	dB	
Isolation	18.7	dB	
2400 MHz			
Gain	14.4	dB	Tone spacing = 1 MHz, Pout per tone = 0dBm
Output IP3	30.9	dBm	
Output P1dB	15.5	dBm	
Input Return Loss	16.0	dB	
Isolation	18.6	dB	

Absolute Maximum Ratings

Parameter	Absolute Limit
Max. Device Current (I_D)	110 mA
Max. Device Voltage (V_D)	6 V
Max. RF Input Power	+10 dBm
Max. Junction Temp. (T_J)	+150°C
Operating Temp. Range (T_L)	-40°C to +85°C
Max. Storage Temp.	+150°C

Operation of this device beyond any one of these limits may cause permanent damage. For reliable continous operation, the device voltage and current must not exceed the maximum operating values specified in the table on page one.

Bias Conditions should also satisfy the following expression:

$$I_D V_D < (T_J - T_L) / R_{TH}, j\text{-}l$$

S-parameters over frequency, at 25ºC

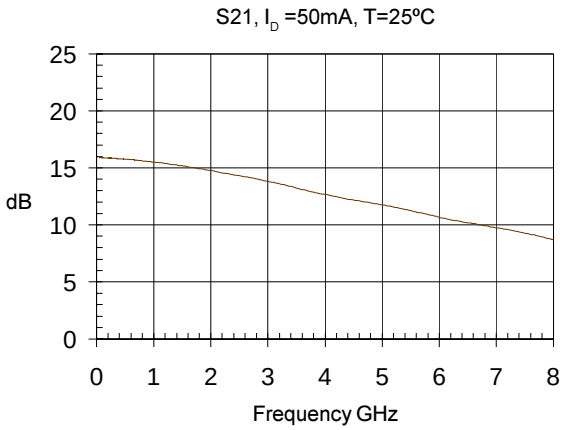

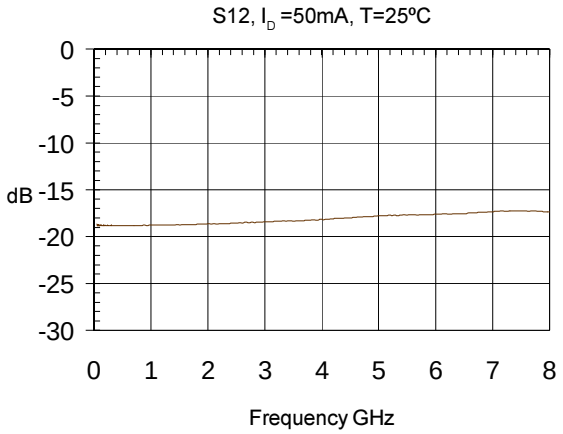

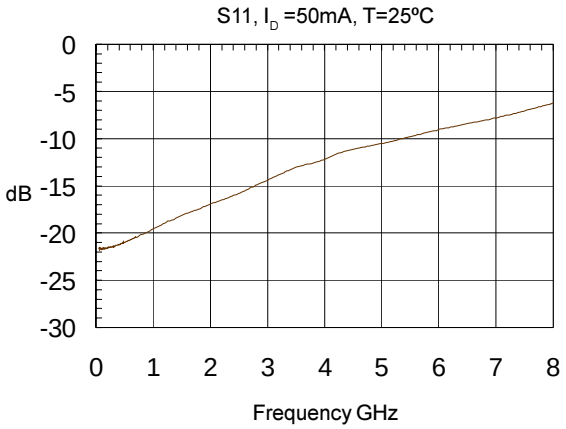

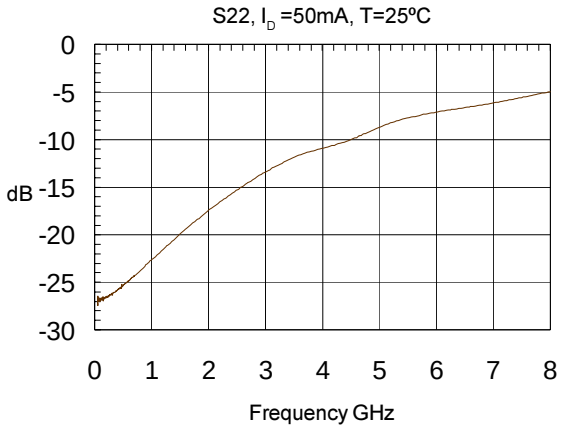

Basic Application Circuit

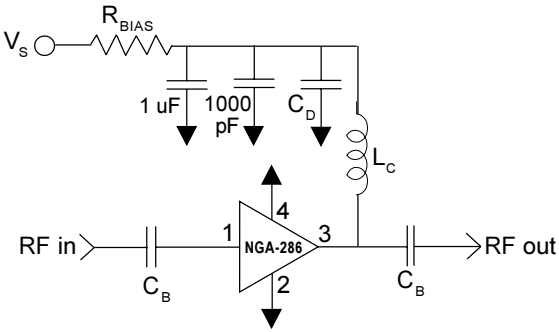

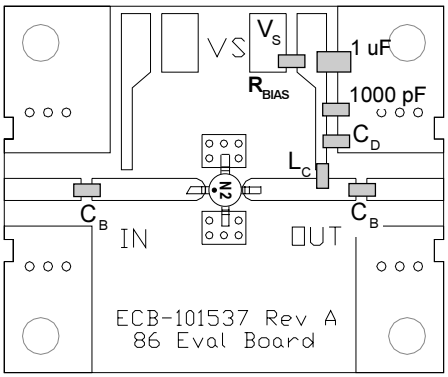

Application Circuit Element Values

Reference Designator	Frequency (Mhz) 500	850	1950	2400	3500
C_B	220 pF	100 pF	68 pF	56 pF	39 pF
C_D	100 pF	68 pF	22 pF	22 pF	15 pF
L_C	68 nH	33 nH	22 nH	18 nH	15 nH

Recommended Bias Resistor Values for I_D=50mA R_{BIAS}=(V_S-V_D) / I_D				
Supply Voltage(V_S)	6 V	8 V	10 V	12 V
R_{BIAS}	39 Ω	82 Ω	120 Ω	160 Ω
Note: R_{BIAS} provides DC bias stability over temperature.				

Mounting Instructions

1. Use a large ground pad area under device pins 2 and 4 with many plated through-holes as shown.

2. We recommend 1 or 2 ounce copper. Measurements for this data sheet were made on a 31 mil thick FR-4 board with 1 ounce copper on both sides.

Part Identification Marking

The part will be marked with an "N2" designator on the top surface of the package.

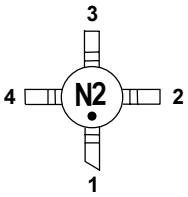

Pin #	Function	Description
1	RF IN	RF input pin. This pin requires the use of an external DC blocking capacitor chosen for the frequency of operation.
2, 4	GND	Connection to ground. Use via holes for best performance to reduce lead inductance as close to ground leads as possible.
3	RF OUT/ BIAS	RF output and bias pin. DC voltage is present on this pin, therefore a DC blocking capacitor is necessary for proper operation.

Caution: ESD sensitive

Appropriate precautions in handling, packaging and testing devices must be observed.

Part Number Ordering Information

Part Number	Reel Size	Devices/Reel
NGA-286	7"	1000

PCB Pad Layout

Dimensions in inches [millimeters]

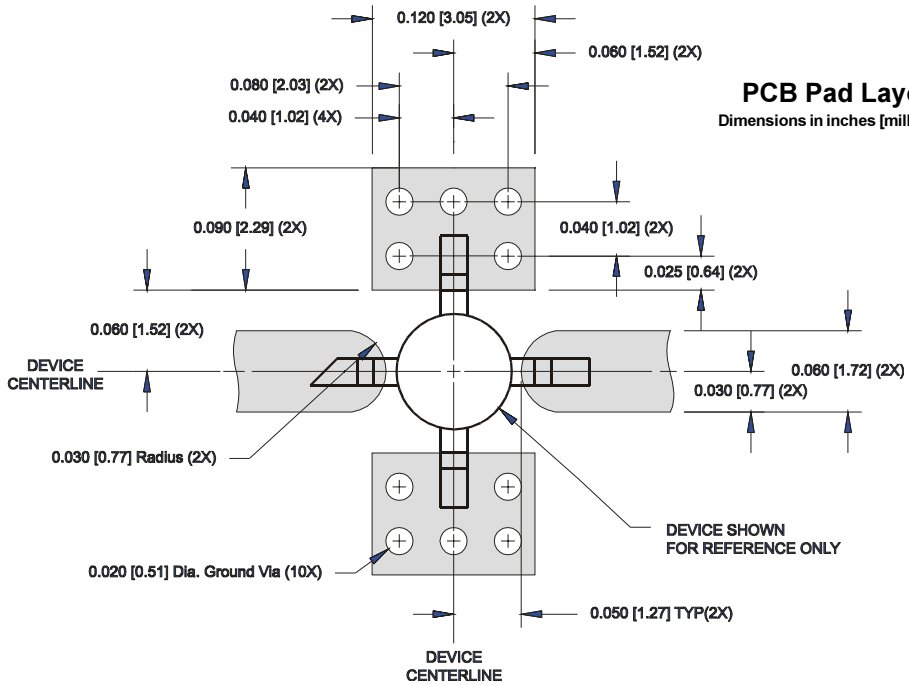

Nominal Package Dimensions

Dimensions in inches [millimeters]

Refer to drawing posted at *www.sirenza.com* for tolerances.