■ CHARACTERISTICS:

DISPLAY CONTENT：128 × 64 DOTS
LCD TYPE: STN Y/G、STN BLUE、STN GREY
LED BACKLIGHT: Y/G、WHITE
CONTROLLER: ST7921 OR EQUAL
OPERATING TEMPERATURE: NORMAL(0–50℃); WIDE(–20–70℃)
POWER SUPPLY: 5.0V
VIEWING ANGLE: 6H; 12H

■ DIMENSIONS/DISPLAY CONTENT

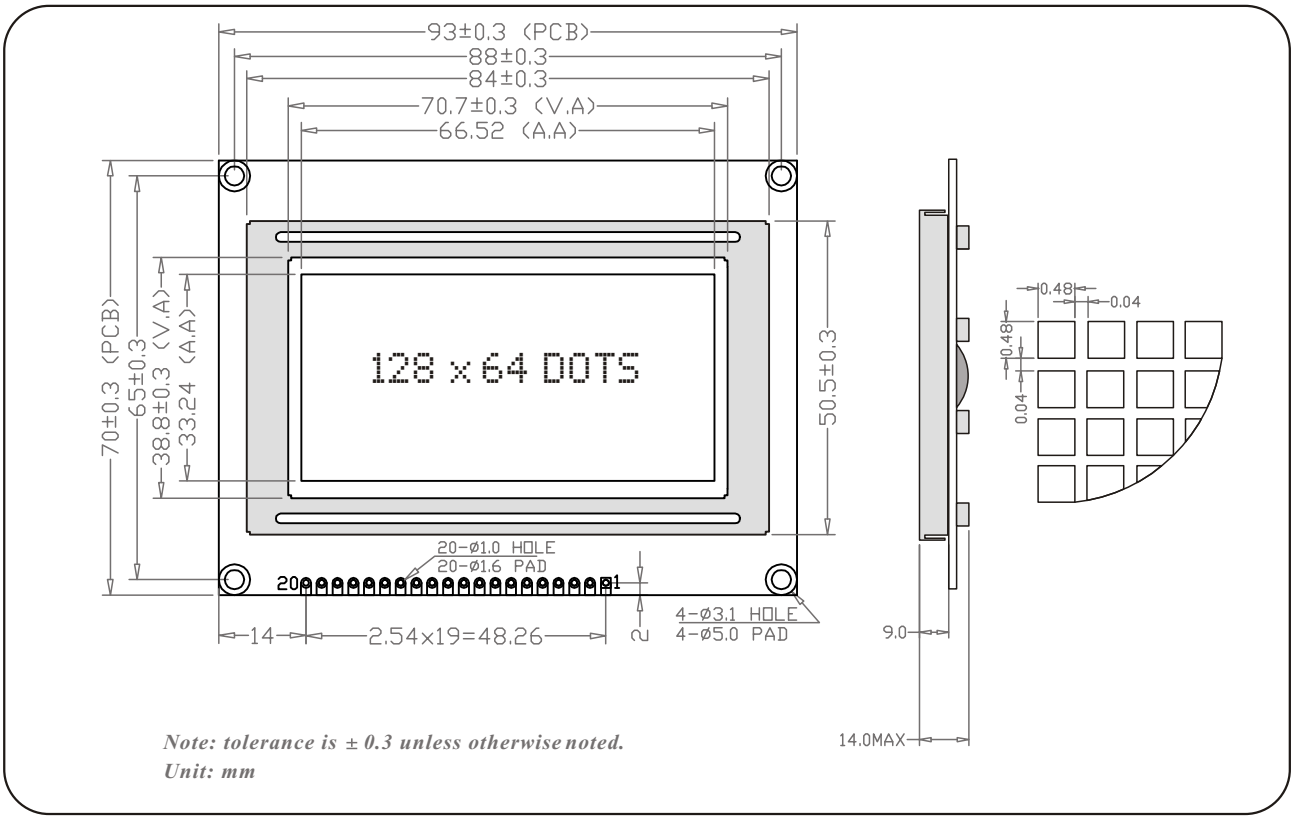

■ PIN CONFIGURATION

1	2	3	4	5	6	7	8	9	10
Vss	VDD	V0/VDD/NC	D/I(CS)	R/W(SDI)	E(SCLK)	DB0	DB1	DB2	DB3
11	12	13	14	15	16	17	18	19	20
DB4	DB5	DB6	DB7	PSB	NC	RST	VEE/NC	LEDA	LEDK

■ LIMIT PARAMETER (Ta=25℃)

Parameter	Symbol	Standard Values		Unit
		Min.	Max	
Supply Voltage	VDD-VSS	0	5.5	V
LCD Voltage	VDD-V0	0	7.0	
Input Voltage	V1	0	VDD	

■ ELECTRONIC PARAMETER

Parameter		Symbol	Standard Values			Unit
			Min.	Typ.	Max	
Voltage	Logic	VDD-VSS	4.75	5.0	5.25	V
	LCD	VDD-V0	4.5	5.0	7.0	V
Current	Logic	IDD	-	2.5	-	mA
	LCD	IEE	-	2.0	-	mA
LCD Drive Voltage(25℃)			-	5.0	-	V
Input Voltage	H	VIH	0.7VDD	-	VDD	V
	L	VIL	0	-	0.3VDD	V
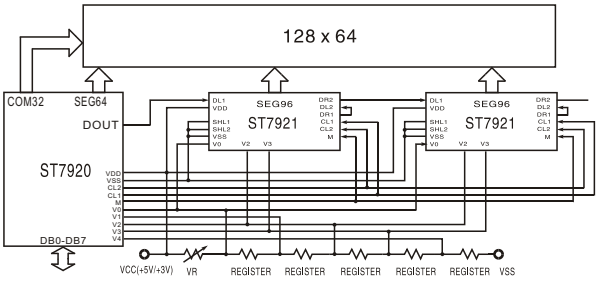
■ APPLICATION CIRCUIT