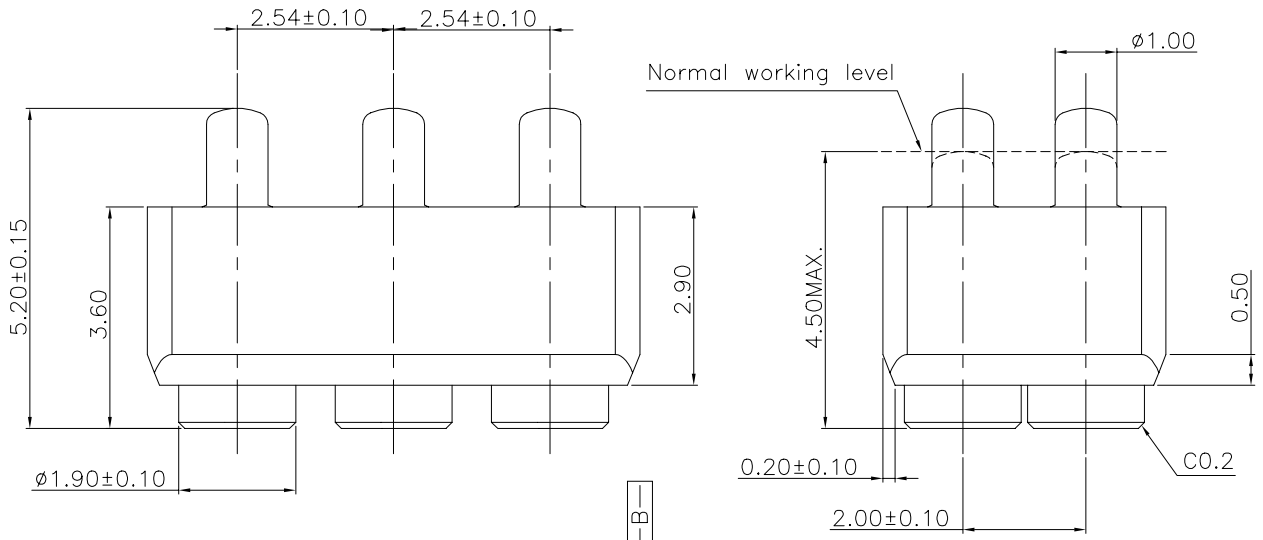

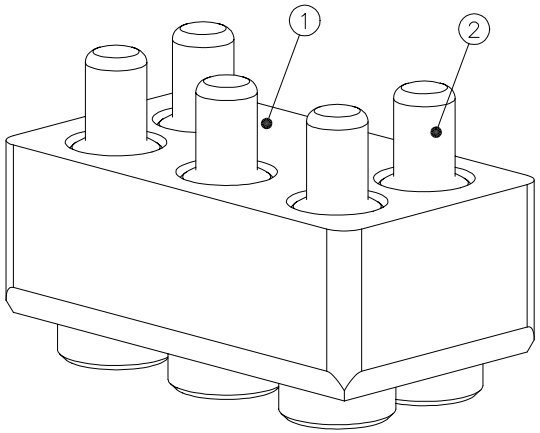

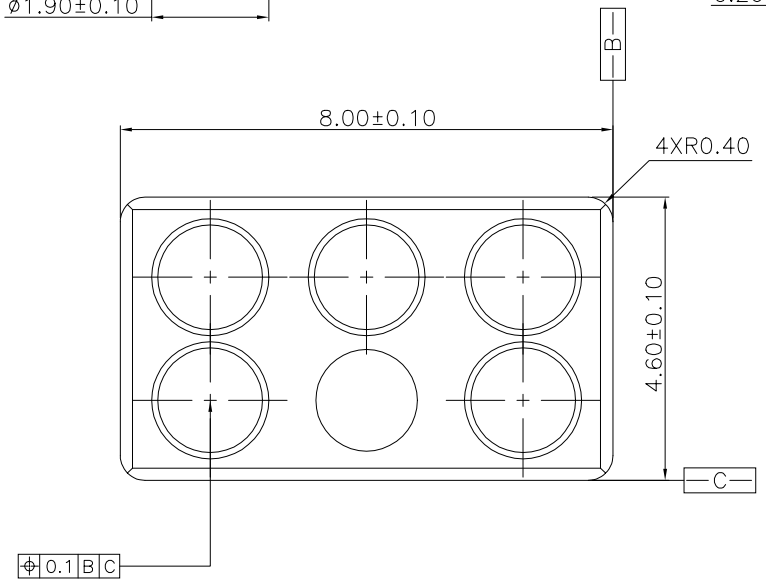

Recommended P.C.B Layout

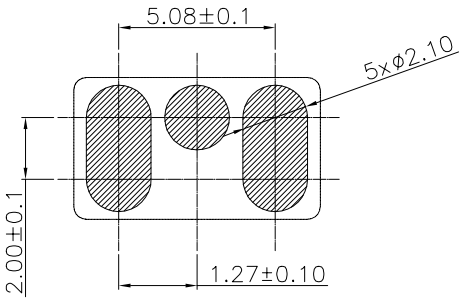

(4:1)

NOTES:

1 MATERIAL,HOUSING: NY6T
COLOUR BLACK.
CONTACT: BRASS
2 MECHANICAL DEMANDS:
CONTACT FORCE:
MIN 30g WITH 0.50mm STROKE
80g +60g/−20g WITH0.7mm STROKE
FULL STROKE:1.3mm

PLATING PISTON: MIN. 5u'' Au OVER 30−50u'' Ni.
PLATING BARREL: MIN. 5u'' Au OVER 30−50u'' Ni.

NO.	DESCRIPTION	MATERIAL	COLOR	REMARK
2	TERMINAL	BRASS	———	GOLD PLATED OVER Ni
1	PLASTIC	NT−6T	BLACK	UL−94V

SUYIN CONNECTOR

CUSTOMER COPY

TITLE: 2.54mm POGO PIN

ECN (DCN) NO.	REV	DATE	DESCRIPTION	CHANGE	APPRO.
	0		NEW	———	———

Angle	±2°
30 ~	±0.50
10 ~ 30	±0.30
~ 10	±0.15

GENERAL TOLERANCE UNLESS OTHERWISE NOTED

DRAW		
DESIGN		
CHECK		
APPRO.		

PART NO.	254019MA005G100ZL
PART NO. (OLD)	
DRAWING NO. D ING	254019MA005G100ZL
SCALE 8:1	UNIT mm A4

021211−50