www.DataSheet.in

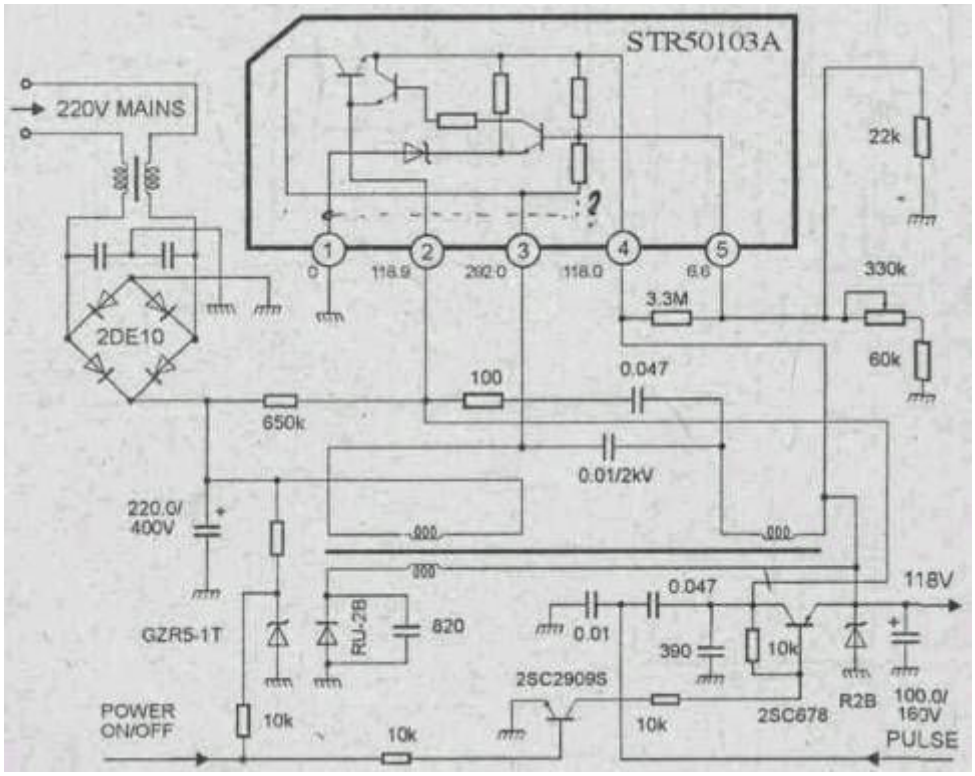

www.DataSheet.in