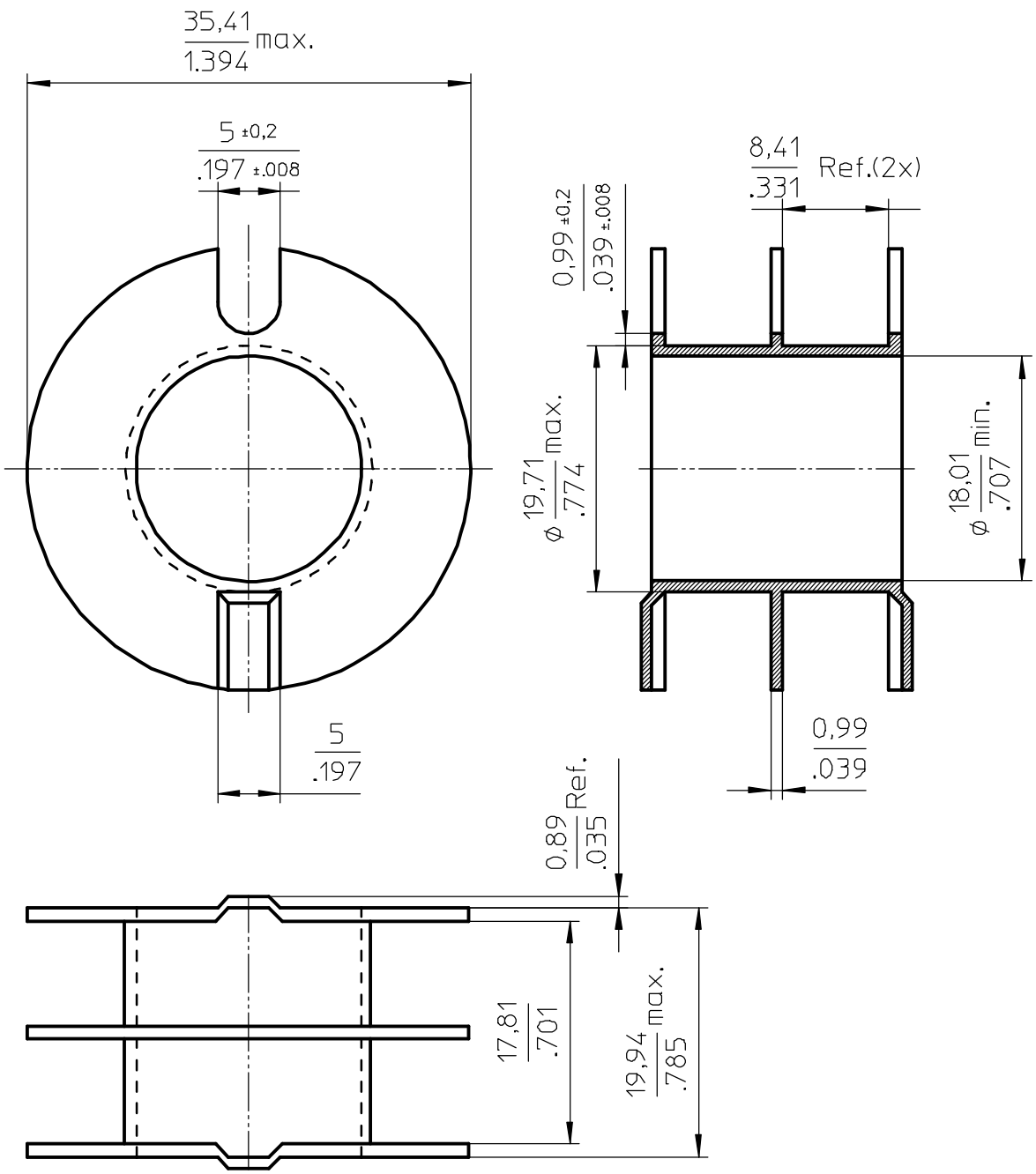

Coil former material: Delrin 900 (POM).
UL file number: E66288 - UL94HB.
max. operating temp: 130°

CLASS.NO.	CP-P42/29-2S-A	4335 000 26301	01-06-01 02-11-04
NAME NAAM: Tjon	SUPERS. VERV	1 SH BL	SH BL 112 – 001	A4
MPA	CHECK CONTR.	DAT.	Property of Eigendom van	© FERROXCUBE 2000