TOLERANCE UNLESS SPECIFIED =	.XXX= +/- .005	.XX= +/- .015	FRACTIONS= +/- .032

28-2000.DC2

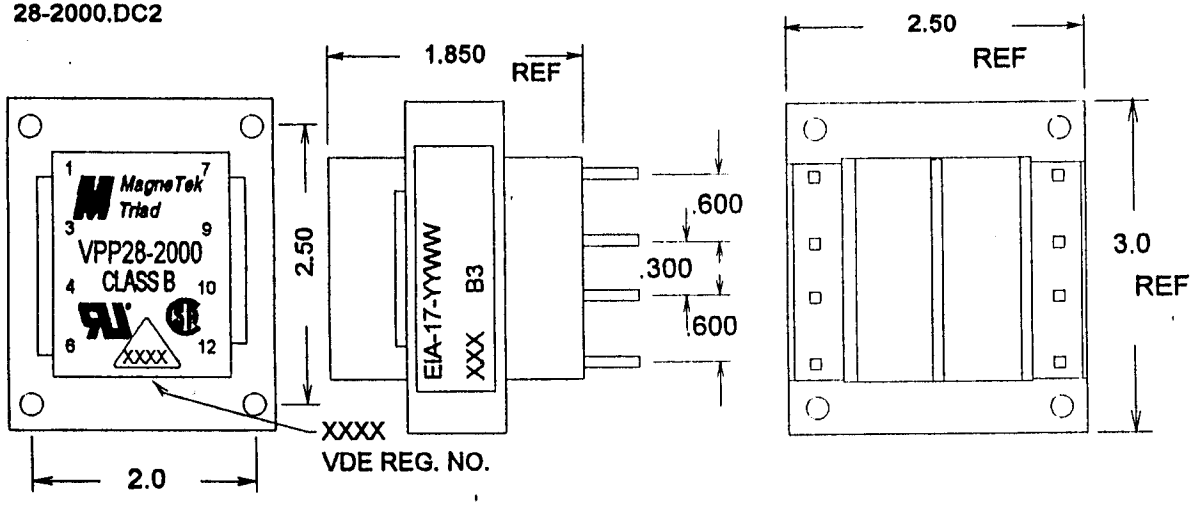

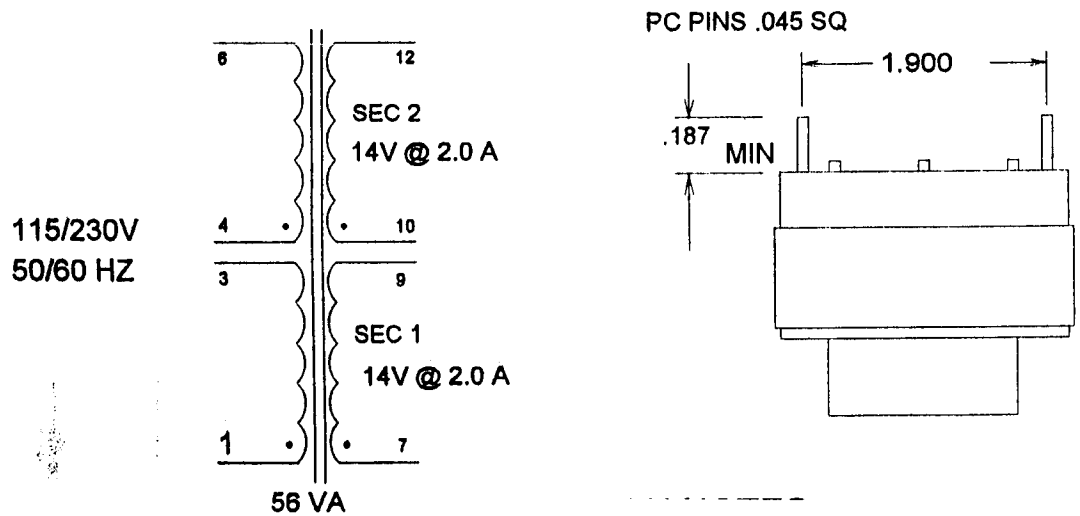

PRODUCTION TESTS

TURNS RATIO =	100%	
DC RESISTANCE IN OHMS	1-3 =	21.5 NOM
	4-6 =	26.5 NOM
	7-9 =	.48 NOM
	10-12 =	.58 NOM

MAX EXCITATION CURRENT = 75 MA

APPLY 230V 60HZ 1-6 (3+4)

PRI WDGS 114.5 TO 115.5 V

SEC WDGS 16.2 TO 17 V

HIPOT: 4000V P-S

4000V P,S, TO CORE

600V P-P, S-S

IMPREGNATION NOTES: PREHEAT 2 HRS

PINS TO BE FREE OF IMPREGNATION.

FINAL ASSEMBLY NOTES

MagneTek

VPP28-2000

METHOD 1 X 1

LEAVE OFF LAST "I" PCS

MARKING SEE LABEL DETAIL ABOVE

APPLY PART NO. LABEL, AFTER IMPREGNATION