MICROCHIP

PIC18CXX2

High-Performance Microcontrollers with 10-Bit A/D

High Performance RISC CPU:

- C-compiler optimized architecture/instruction set
  - Source code compatible with the PIC16CXX instruction set
- * Linear program memory addressing to 2M bytes
- * Linear data memory addressing to 4K bytes

Device	On-Chip Program Memory		On-Chip RAM (bytes)
	EPROM (bytes)	# Single Word Instructions	
PIC18C242	16K	8192	512
PIC18C252	32K	16384	1536
PIC18C442	16K	8192	512
PIC18C452	32K	16384	1536

- * Up to 10 MIPs operation:
  - DC - 40 MHz osc./clock input
  - 4 MHz - 10 MHz osc./clock input with PLL active
- 16-bit wide instructions, 8-bit wide data path
- Priority levels for interrupts
- * 8 x 8 Single Cycle Hardware Multiplier

Peripheral Features:

- High current sink/source 25 mA/25 mA
- Three external interrupt pins
- **Timer0** module: 8-bit/16-bit timer/counter with 8-bit programmable prescaler
- **Timer1** module: 16-bit timer/counter
- **Timer2** module: 8-bit timer/counter with 8-bit period register (time-base for PWM)
- * **Timer3** module: 16-bit timer/counter
- Secondary oscillator clock option - Timer1/Timer3
- Two **Capture/Compare/PWM** (CCP) modules. CCP pins that can be configured as:
  - Capture input: capture is 16-bit, max. resolution 6.25 ns (T_{CY}/16)
  - Compare is 16-bit, max. resolution 100 ns (T_{CY})
  - PWM output: PWM resolution is 1- to 10-bit. Max. PWM freq. @: 8-bit resolution = 156 kHz; 10-bit resolution = 39 kHz
- **Master Synchronous Serial Port** (MSSP) module. Two modes of operation:
  - 3-wire SPI™ (supports all 4 SPI modes)
  - I^2C™ master and slave mode
- **Addressable USART** module:
  - Supports interrupt on Address bit
- **Parallel Slave Port** (PSP) module

Pin Diagrams

DIP, Windowed CERDIP

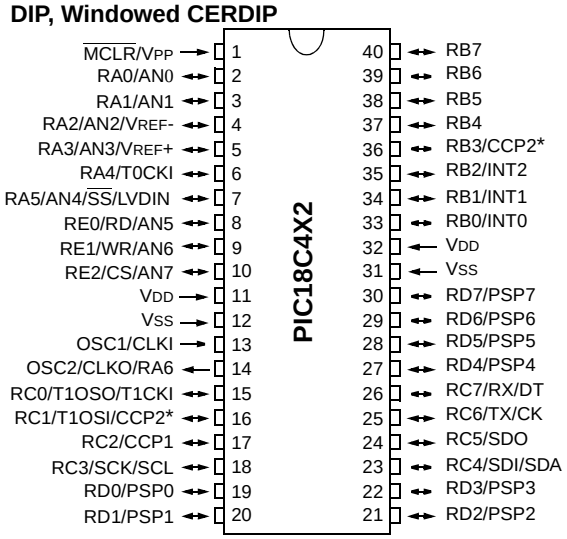

* RB3 is the alternate pin for the CCP2 pin multiplexing.

NOTE: Pin compatible with 40-pin PIC16C7X devices

Analog Features:

- **10-bit Analog-to-Digital Converter** module (A/D) with:
  - Fast sampling rate
  - Conversion available during sleep
  - DNL = ±1 LSb, INL = ±1 LSb
- Programmable **Low-Voltage Detection** (LVD) module
  - Supports interrupt on low voltage detection
- Programmable Brown-out Reset (BOR)

Special Microcontroller Features:

- Power-on Reset (POR), Power-up Timer (PWRT) and Oscillator Start-up Timer (OST)
- Watchdog Timer (WDT) with its own on-chip RC oscillator for reliable operation
- Programmable code-protection
- Power saving SLEEP mode
- Selectable oscillator options including:
  - 4X Phase Lock Loop (of primary oscillator)
  - Secondary Oscillator (32 kHz) clock input
- In-Circuit Serial Programming (ICSP™) via two pins

CMOS Technology:

- Low-power, high-speed EPROM technology
- Fully static design
- Wide operating voltage range (2.5V to 5.5V)
- Industrial and Extended temperature ranges
- Low-power consumption

Pin Diagrams

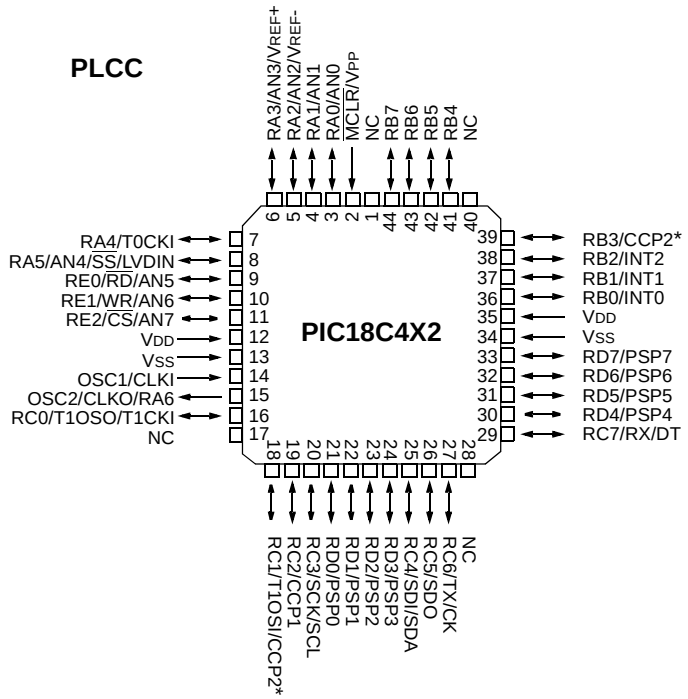

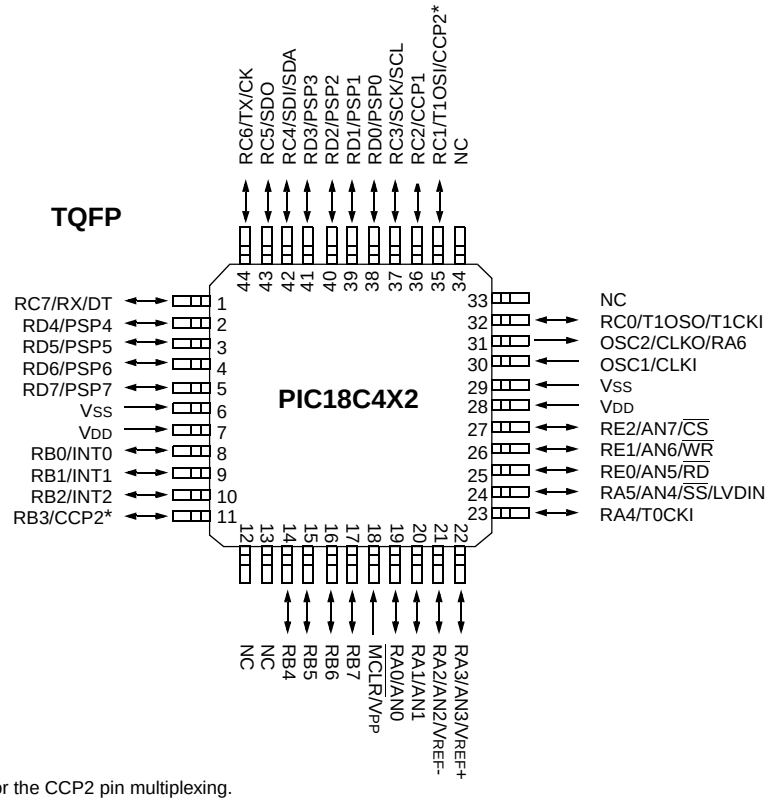

* RB3 is the alternate pin for the CCP2 pin multiplexing.

NOTE: Pin compatible with 44-pin PIC16C7X devices

Pin Diagrams (Cont.'d)

DIP, JW

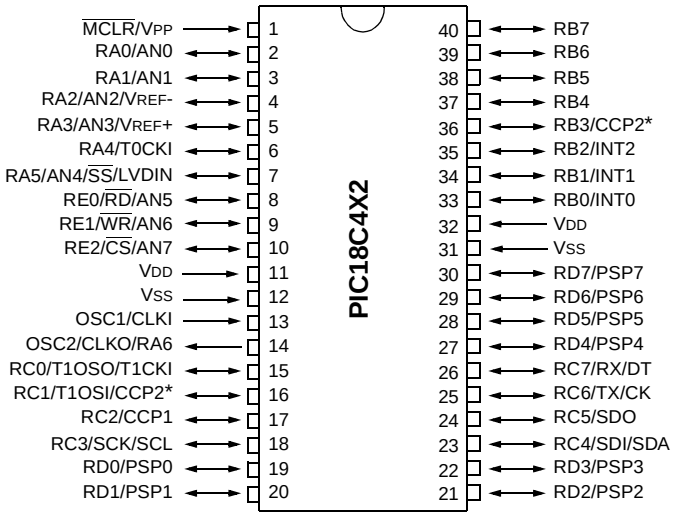

NOTE: Pin compatible with 40-pin PIC16C7X devices

DIP, SOIC, JW

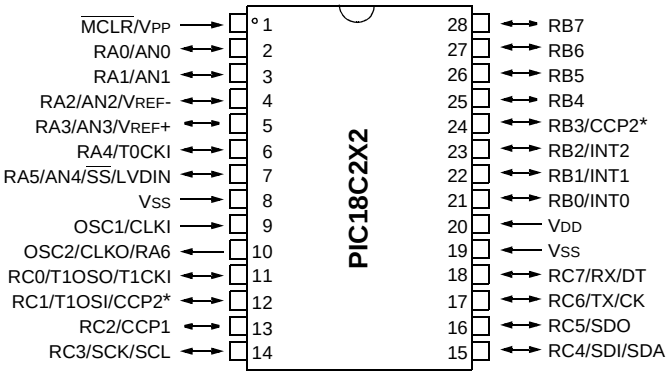

* RB3 is the alternate pin for the CCP2 pin multiplexing.

NOTE: Pin compatible with 28-pin PIC16C7X devices

Table of Contents

To Our Valued Customers

Most Current Data Sheet

To obtain the most up-to-date version of this data sheet, please register at our Worldwide Web site at:

http://www.microchip.com

You can determine the version of a data sheet by examining its literature number found on the bottom outside corner of any page. The last character of the literature number is the version number. e.g., DS30000A is version A of document DS30000.

New Customer Notification System

Register on our web site (www.microchip.com/cn) to receive the most current information on our products.

Errata

An errata sheet may exist for current devices, describing minor operational differences (from the data sheet) and recommended workarounds. As device/documentation issues become known to us, we will publish an errata sheet. The errata will specify the revision of silicon and revision of document to which it applies.

To determine if an errata sheet exists for a particular device, please check with one of the following:

- Microchip's Worldwide Web site; http://www.microchip.com
- Your local Microchip sales office (see last page)
- The Microchip Corporate Literature Center; U.S. FAX: (602) 786-7277

When contacting a sales office or the literature center, please specify which device, revision of silicon and data sheet (include literature number) you are using.

Corrections to this Data Sheet

We constantly strive to improve the quality of all our products and documentation. We have spent a great deal of time to ensure that this document is correct. However, we realize that we may have missed a few things. If you find any information that is missing or appears in error, please:

- Fill out and mail in the reader response form in the back of this data sheet.
- E-mail us at webmaster@microchip.com.

We appreciate your assistance in making this a better document.

1.0 DEVICE OVERVIEW

This document contains device-specific information for the following four devices:

1. PIC18C242
2. PIC18C252
3. PIC18C442
4. PIC18C452

These devices come in 28 and 40-pin packages. The 28-pin devices do not have a Parallel Slave Port (PSP) implemented and the number of Analog-to-Digital (A/D) converter input channels is reduced to 5. An overview of features is shown in Table 1-1.

The following two figures are device block diagrams sorted by pin count; 28-pin for Figure 1-1 and 40-pin for Figure 1-2. The 28-pin and 40-pin pinouts are listed in Table 1-2 and Table 1-3 respectively.

TABLE 1-1: DEVICE FEATURES

Features	PIC18C242	PIC18C252	PIC18C442	PIC18C452
Operating Frequency	DC - 40 MHz	DC - 40 MHz	DC - 40 MHz	DC - 40 MHz
Program Memory (Bytes)	16K	32K	16K	32K
Program Memory (Instructions)	8192	16384	8192	16384
Data Memory (Bytes)	512	1536	512	1536
Interrupt sources	16	16	17	17
I/O Ports	Ports A, B, C	Ports A, B, C	Ports A, B, C, D, E	Ports A, B, C, D, E
Timers	4	4	4	4
Capture/Compare/PWM modules	2	2	2	2
Serial Communications	MSSP, Addressable USART	MSSP, Addressable USART	MSSP, Addressable USART	MSSP, Addressable USART
Parallel Communications	—	—	PSP	PSP
10-bit Analog-to-Digital Module	5 input channels	5 input channels	8 input channels	8 input channels
Resets (and Delays)	POR, BOR, Reset Instruction, Stack Full, Stack Underflow (PWRT, OST)	POR, BOR, Reset Instruction, Stack Full, Stack Underflow (PWRT, OST)	POR, BOR, Reset Instruction, Stack Full, Stack Underflow (PWRT, OST)	POR, BOR, Reset Instruction, Stack Full, Stack Underflow (PWRT, OST)
Programmable Low Voltage Detect	Yes	Yes	Yes	Yes
Programmable Brown-out Reset	Yes	Yes	Yes	Yes
Instruction Set	75 Instructions	75 Instructions	75 Instructions	75 Instructions
Packages	28-pin DIP 28-pin SOIC 28-pin JW	28-pin DIP 28-pin SOIC 28-pin JW	40-pin DIP 40-pin PLCC 40-pin TQFP 40-pin JW	40-pin DIP 40-pin PLCC 40-pin TQFP 40-pin JW

FIGURE 1-1: PIC18C2X2 BLOCK DIAGRAM

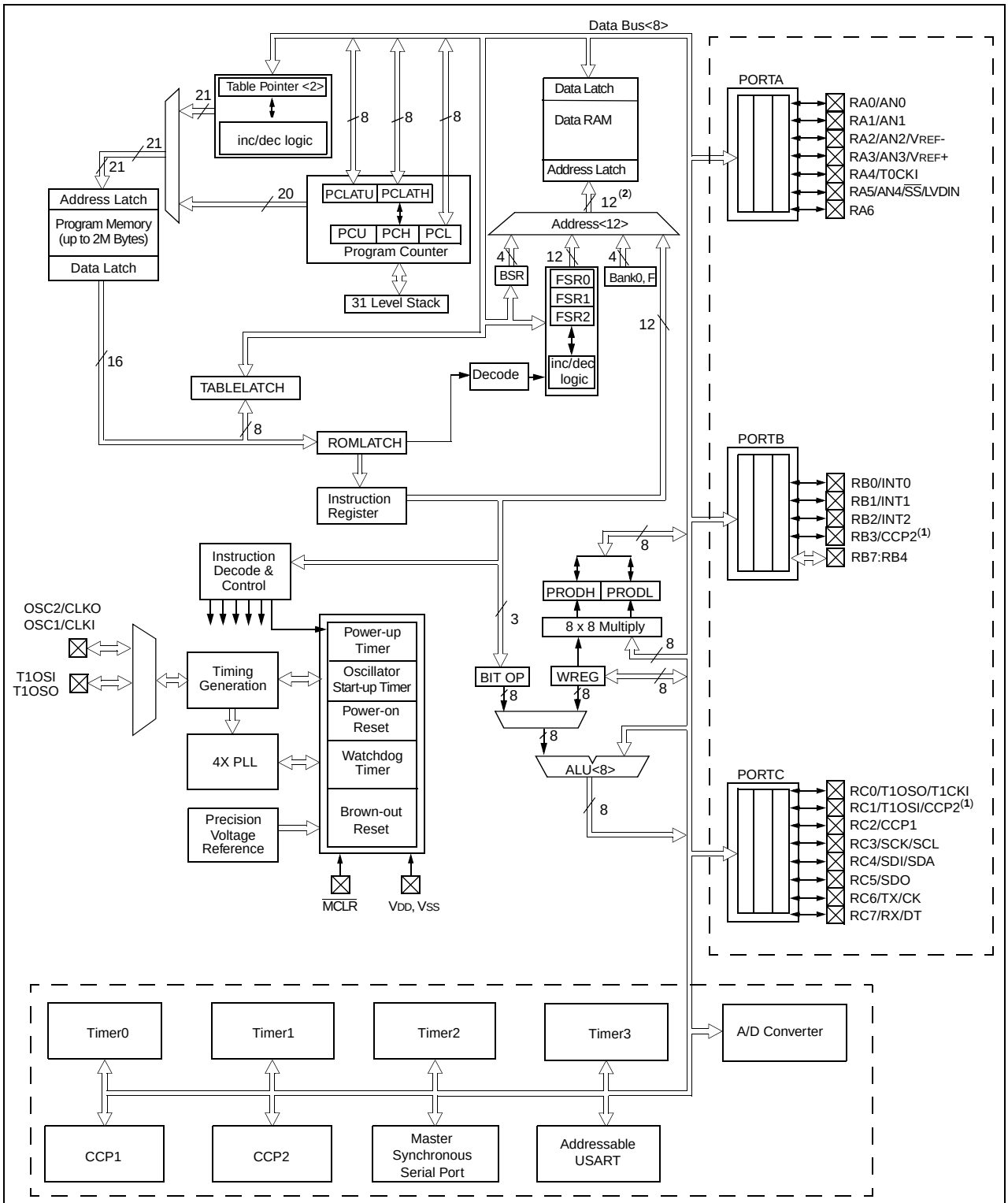

Note 1: Optional multiplexing of CCP2 input/output with RB3 is enabled by selection of configuration bit.

2: The high order bits of the Direct Address for the RAM are from the BSR register (except for the MOVFF instruction).

3: Many of the general purpose I/O pins are multiplexed with one or more peripheral module functions. The multiplexing combinations are device dependent.

FIGURE 1-2: PIC18C4X2 BLOCK DIAGRAM

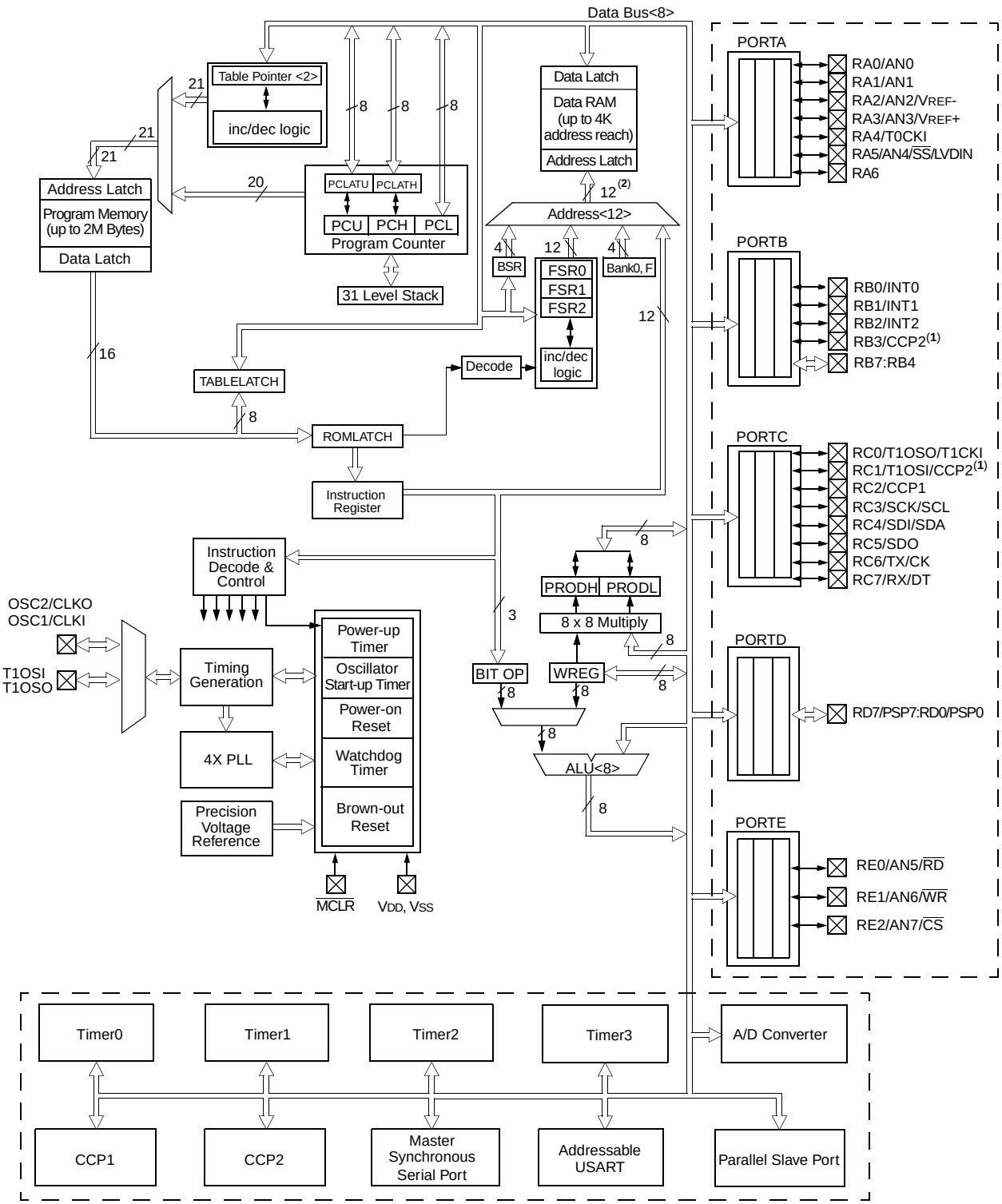

Note 1: Optional multiplexing of CCP2 input/output with RB3 is enabled by selection of configuration bit.

2: The high order bits of the Direct Address for the RAM are from the BSR register (except for the MOVFF instruction).

3: Many of the general purpose I/O pins are multiplexed with one or more peripheral module functions. The multiplexing combinations are device dependent.

TABLE 1-2: PIC18C2X2 PINOUT I/O DESCRIPTIONS

Pin Name	Pin Number DIP	Pin Number SOIC	Pin Type	Buffer Type	Description
$\overline{MCLR}$/VPP	1	1			
$\overline{MCLR}$			I	ST	Master clear (reset) input. This pin is an active low reset to the device.
VPP			P		Programming voltage input.
NC	—	—	—	—	These pins should be left unconnected.
OSC1/CLKI	9	9			
OSC1			I	ST	Oscillator crystal input or external clock source input. ST buffer when configured in RC mode. CMOS otherwise.
CLKI			I	CMOS	External clock source input. Always associated with pin function OSC1. (See related OSC1/CLKIN, OSC2/CLKOUT pins).
OSC2/CLKO/RA6	10	10			
OSC2			O	—	Oscillator crystal output. Connects to crystal or resonator in crystal oscillator mode.
CLKO			O	—	In RC mode, OSC2 pin outputs CLKOUT which has 1/4 the frequency of OSC1, and denotes the instruction cycle rate.
RA6			I/O	TTL	General Purpose I/O pin.
					PORTA is a bi-directional I/O port.
RA0/AN0	2	2			
RA0			I/O	TTL	Digital I/O.
AN0			I	Analog	Analog input 0.
RA1/AN1	3	3			
RA1			I/O	TTL	Digital I/O.
AN1			I	Analog	Analog input 1.
RA2/AN2/VREF-	4	4			
RA2			I/O	TTL	Digital I/O.
AN2			I	Analog	Analog input 2.
VREF-			I	Analog	A/D Reference Voltage (Low) input.
RA3/AN3/VREF+	5	5			
RA3			I/O	TTL	Digital I/O.
AN3			I	Analog	Analog input 3.
VREF+			I	Analog	A/D Reference Voltage (High) input.
RA4/T0CKI	6	6			
RA4			I/O	ST/OD	Digital I/O. Open drain when configured as output.
T0CKI			I	ST	Timer0 external clock input.
RA5/AN4/$\overline{SS}$/LVDIN	7	7			
RA5			I/O	TTL	Digital I/O.
AN4			I	Analog	Analog input 4.
$\overline{SS}$			I	ST	SPI Slave Select input.
LVDIN			I	Analog	Low Voltage Detect Input.
RA6					See the OSC2/CLKO/RA6 pin.

Legend: TTL = TTL compatible input
ST = Schmitt Trigger input with CMOS levels
I = Input
P = Power
CMOS = CMOS compatible input or output
O = Output
OD = Open Drain (no P diode to VDD)

TABLE 1-2: PIC18C2X2 PINOUT I/O DESCRIPTIONS (Cont.'d)

Pin Name	Pin Number		Pin Type	Buffer Type	Description
	DIP	SOIC			
					PORTB is a bi-directional I/O port. PORTB can be software programmed for internal weak pull-ups on all inputs.
RB0/INT0	21	21			
RB0			I/O	TTL	Digital I/O.
INT0			I	ST	External Interrupt 0.
RB1/INT1	22	22			
RB1			I/O	TTL	
INT1			I	ST	External Interrupt 1.
RB2/INT2	23	23			
RB2			I/O	TTL	Digital I/O.
INT2			I	ST	External Interrupt 2.
RB3/CCP2	24	24			
RB3			I/O	TTL	Digital I/O.
CCP2			I/O	ST	Capture2 input, Compare2 output, PWM2 output.
RB4	25	25	I/O	TTL	Digital I/O. Interrupt on change pin.
RB5	26	26	I/O	TTL	Digital I/O. Interrupt on change pin.
RB6	27	27	I/O	TTL	Digital I/O. Interrupt on change pin.
			I	ST	ICSP programming clock.
RB7	28	28	I/O	TTL	Digital I/O. Interrupt on change pin.
			I/O	ST	ICSP programming data.

Legend: TTL = TTL compatible input
ST = Schmitt Trigger input with CMOS levels
I = Input
P = Power
CMOS = CMOS compatible input or output
O = Output
OD = Open Drain (no P diode to V_{DD})

TABLE 1-2: PIC18C2X2 PINOUT I/O DESCRIPTIONS (Cont.'d)

Pin Name	Pin Number DIP	Pin Number SOIC	Pin Type	Buffer Type	Description
					PORTC is a bi-directional I/O port.
RC0/T1OSO/T1CKI	11	11			
RC0			I/O	ST	Digital I/O.
T1OSO			O	—	Timer1 oscillator output.
T1CKI			I	ST	Timer1/Timer3 external clock input.
RC1/T1OSI/CCP2	12	12			
RC1			I/O	ST	Digital I/O.
T1OSI			I	CMOS	Timer1 oscillator input.
CCP2			I/O	ST	Capture2 input, Compare2 output, PWM2 output.
RC2/CCP1	13	13			
RC2			I/O	ST	Digital I/O.
CCP1			I/O	ST	Capture1 input/Compare1 output/PWM1 output.
RC3/SCK/SCL	14	14			
RC3			I/O	ST	Digital I/O.
SCK			I/O	ST	Synchronous serial clock input/output for SPI mode.
SCL			I/O	ST	Synchronous serial clock input/output for I^2C mode
RC4/SDI/SDA	15	15			
RC4			I/O	ST	Digital I/O.
SDI			I	ST	SPI Data In.
SDA			I/O	ST	I^2C Data I/O.
RC5/SDO	16	16			
RC5			I/O	ST	Digital I/O.
SDO			O	—	SPI Data Out.
RC6/TX/CK	17	17			
RC6			I/O	ST	Digital I/O.
TX			O	—	USART Asynchronous Transmit.
CK			I/O	ST	USART Synchronous Clock. (See related RX/DT)
RC7/RX/DT	18	18			
RC7			I/O	ST	Digital I/O.
RX			I	ST	USART Asynchronous Receive.
DT			I/O	ST	USART Synchronous Data. (See related TX/CK)
VSS	8, 19	8, 19	P	—	Ground reference for logic and I/O pins.
VDD	20	20	P	—	Positive supply for logic and I/O pins.

Legend: TTL = TTL compatible input
ST = Schmitt Trigger input with CMOS levels
I = Input
P = Power
CMOS = CMOS compatible input or output
O = Output
OD = Open Drain (no P diode to VDD)

TABLE 1-3: PIC18C4X2 PINOUT I/O DESCRIPTIONS

Pin Name	Pin Number			Pin Type	Buffer Type	Description
	DIP	PLCC	TQFP			
$\overline{MCLR}$/VPP	1	2	18			
$\overline{MCLR}$				I	ST	Master clear (reset) input. This pin is an active low reset to the device.
VPP				P		Programming voltage input.
NC	—			—	—	These pins should be left unconnected.
OSC1/CLKI	13	14	30			
OSC1				I	ST	Oscillator crystal input or external clock source input. ST buffer when configured in RC mode. CMOS otherwise.
CLKI				I	CMOS	External clock source input. Always associated with pin function OSC1. (See related OSC1/CLKIN, OSC2/CLKOUT pins).
OSC2/CLKO/RA6	14	15	31			
OSC2				O	—	Oscillator crystal output. Connects to crystal or resonator in crystal oscillator mode.
CLKO				O	—	In RC mode, OSC2 pin outputs CLKOUT, which has 1/4 the frequency of OSC1 and denotes the instruction cycle rate.
RA6				I/O	TTL	General Purpose I/O pin.
						PORTA is a bi-directional I/O port.
RA0/AN0	2	3	19			
RA0				I/O	TTL	Digital I/O.
AN0				I	Analog	Analog input 0.
RA1/AN1	3	4	20			
RA1				I/O	TTL	Digital I/O.
AN1				I	Analog	Analog input 1.
RA2/AN2/VREF-	4	5	21			
RA2				I/O	TTL	Digital I/O.
AN2				I	Analog	Analog input 2.
VREF-				I	Analog	A/D Reference Voltage (Low) input.
RA3/AN3/VREF+	5	6	22			
RA3				I/O	TTL	Digital I/O.
AN3				I	Analog	Analog input 3.
VREF+				I	Analog	A/D Reference Voltage (High) input.
RA4/T0CKI	6	7	23			
RA4				I/O	ST/OD	Digital I/O. Open drain when configured as output.
T0CKI				I	ST	Timer0 external clock input.
RA5/AN4/$\overline{SS}$/LVDIN	7	8	24			
RA5				I/O	TTL	Digital I/O.
AN4				I	Analog	Analog input 4.
$\overline{SS}$				I	ST	SPI Slave Select input.
LVDIN				I	Analog	Low Voltage Detect Input.
RA6						See the OSC2/CLKO/RA6 pin.

Legend: TTL = TTL compatible input
ST = Schmitt Trigger input with CMOS levels
I = Input
P = Power
CMOS = CMOS compatible input or output
O = Output
OD = Open Drain (no P diode to VDD)

TABLE 1-3: PIC18C4X2 PINOUT I/O DESCRIPTIONS (Cont.'d)

Pin Name	Pin Number			Pin Type	Buffer Type	Description
	DIP	PLCC	TQFP			
						PORTB is a bi-directional I/O port. PORTB can be software programmed for internal weak pull-ups on all inputs.
RB0/INT0	33	36	8			
RB0				I/O	TTL	Digital I/O.
INT0				I	ST	External Interrupt 0.
RB1/INT1	34	37	9			
RB1				I/O	TTL	
INT1				I	ST	External Interrupt 1.
RB2/INT2	35	38	10			
RB2				I/O	TTL	Digital I/O.
INT2				I	ST	External Interrupt 2.
RB3/CCP2	36	39	11			
RB3				I/O	TTL	Digital I/O.
CCP2				I/O	ST	Capture2 input, Compare2 output, PWM2 output.
RB4	37	41	14	I/O	TTL	Digital I/O. Interrupt on change pin.
RB5	38	42	15	I/O	TTL	Digital I/O. Interrupt on change pin.
RB6	39	43	16	I/O	TTL	Digital I/O. Interrupt on change pin.
				I	ST	ICSP programming clock.
RB7	40	44	17	I/O	TTL	Digital I/O. Interrupt on change pin.
				I/O	ST	ICSP programming data.

Legend: TTL = TTL compatible input
ST = Schmitt Trigger input with CMOS levels
I = Input
P = Power
CMOS = CMOS compatible input or output
O = Output
OD = Open Drain (no P diode to V_{DD})

TABLE 1-3: PIC18C4X2 PINOUT I/O DESCRIPTIONS (Cont.'d)

Pin Name	Pin Number			Pin Type	Buffer Type	Description
	DIP	PLCC	TQFP			
						PORTC is a bi-directional I/O port.
RC0/T1OSO/T1CKI	15	16	32			
RC0				I/O	ST	Digital I/O.
T1OSO				O	—	Timer1 oscillator output.
T1CKI				I	ST	Timer1/Timer3 external clock input.
RC1/T1OSI/CCP2	16	18	35			
RC1				I/O	ST	Digital I/O.
T1OSI				I	CMOS	Timer1 oscillator input.
CCP2				I/O	ST	Capture2 input, Compare2 output, PWM2 output.
RC2/CCP1	17	19	36			
RC2				I/O	ST	Digital I/O.
CCP1				I/O	ST	Capture1 input/Compare1 output/PWM1 output.
RC3/SCK/SCL	18	20	37			
RC3				I/O	ST	Digital I/O.
SCK				I/O	ST	Synchronous serial clock input/output for SPI mode.
SCL				I/O	ST	Synchronous serial clock input/output for I^2C mode.
RC4/SDI/SDA	23	25	42			
RC4				I/O	ST	Digital I/O.
SDI				I	ST	SPI Data In.
SDA				I/O	ST	I^2C Data I/O.
RC5/SDO	24	26	43			
RC5				I/O	ST	Digital I/O.
SDO				O	—	SPI Data Out.
RC6/TX/CK	25	27	44			
RC6				I/O	ST	Digital I/O.
TX				O	—	USART Asynchronous Transmit.
CK				I/O	ST	USART Synchronous Clock. (See related RX/DT)
RC7/RX/DT	26	29	1			
RC7				I/O	ST	Digital I/O.
RX				I	ST	USART Asynchronous Receive.
DT				I/O	ST	USART Synchronous Data. (See related TX/CK)

Legend: TTL = TTL compatible input
ST = Schmitt Trigger input with CMOS levels
I = Input
P = Power
CMOS = CMOS compatible input or output
O = Output
OD = Open Drain (no P diode to V_{DD})

TABLE 1-3: PIC18C4X2 PINOUT I/O DESCRIPTIONS (Cont.'d)

Pin Name	Pin Number			Pin Type	Buffer Type	Description
	DIP	PLCC	TQFP			
						PORTD is a bi-directional I/O port. Parallel Slave Port (PSP) for interfacing to a microprocessor port. These pins have TTL input buffers when PSP module is enabled.
RD0/PSP0	19	21	38	I/O	ST TTL	Digital I/O. Parallel Slave Port Data.
RD1/PSP1	20	22	39	I/O	ST TTL	Digital I/O. Parallel Slave Port Data.
RD2/PSP2	21	23	40	I/O	ST TTL	Digital I/O. Parallel Slave Port Data.
RD3/PSP3	22	24	41	I/O	ST TTL	Digital I/O. Parallel Slave Port Data.
RD4/PSP4	27	30	2	I/O	ST TTL	Digital I/O. Parallel Slave Port Data.
RD5/PSP5	28	31	3	I/O	ST TTL	Digital I/O. Parallel Slave Port Data.
RD6/PSP6	29	32	4	I/O	ST TTL	Digital I/O. Parallel Slave Port Data.
RD7/PSP7	30	33	5	I/O	ST TTL	Digital I/O. Parallel Slave Port Data.
						PORTE is a bi-directional I/O port.
RE0/$\overline{RD}$/AN5	8	9	25	I/O		
RE0					ST	Digital I/O.
$\overline{RD}$					TTL	Read control for parallel slave port. (See also $\overline{WR}$ and $\overline{CS}$ pins)
AN5					Analog	Analog input 5.
RE1/$\overline{WR}$/AN6	9	10	26	I/O		
RE1					ST	Digital I/O.
$\overline{WR}$					TTL	Write control for parallel slave port. (See $\overline{CS}$ and $\overline{RD}$ pins)
AN6					Analog	Analog input 6.
RE2/$\overline{CS}$/AN7	10	11	27	I/O		
RE2					ST	Digital I/O.
$\overline{CS}$					TTL	Chip Select control for parallel slave port. (See related $\overline{RD}$ and $\overline{WR}$)
AN7					Analog	Analog input 7.
VSS	12, 31	13, 34	6, 29	P	—	Ground reference for logic and I/O pins.
VDD	11, 32	12, 35	7, 28	P	—	Positive supply for logic and I/O pins.

Legend: TTL = TTL compatible input
ST = Schmitt Trigger input with CMOS levels
I = Input
P = Power
CMOS = CMOS compatible input or output
O = Output
OD = Open Drain (no P diode to VDD)

2.0 OSCILLATOR CONFIGURATIONS

2.1 Oscillator Types

The PIC18CXX2 can be operated in eight different oscillator modes. The user can program three configuration bits (FOSC2, FOSC1, and FOSC0) to select one of these eight modes:

1. LP — Low Power Crystal
2. XT — Crystal/Resonator
3. HS — High Speed Crystal/Resonator
4. HS + PLL — High Speed Crystal/Resonator with PLL enabled
5. RC — External Resistor/Capacitor
6. RCIO — External Resistor/Capacitor with I/O pin enabled
7. EC — External Clock
8. ECIO — External Clock with I/O pin enabled

2.2 Crystal Oscillator/Ceramic Resonators

In XT, LP, HS or HS-PLL oscillator modes, a crystal or ceramic resonator is connected to the OSC1 and OSC2 pins to establish oscillation. Figure 2-1 shows the pin connections. An external clock source may also be connected to the OSC1 pin in these modes, as shown in Figure 2-2.

The PIC18CXX2 oscillator design requires the use of a parallel cut crystal.

Note:	Use of a series cut crystal may give a frequency out of the crystal manufacturers specifications.

FIGURE 2-1: CRYSTAL/CERAMIC RESONATOR OPERATION (HS, XT OR LP OSC CONFIGURATION)

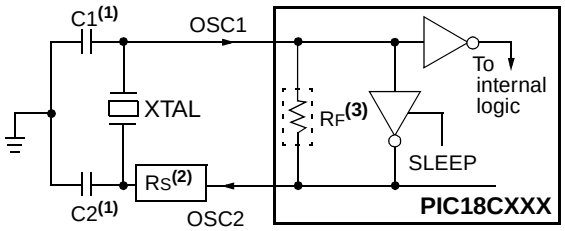

Note 1: See Table 2-1 and Table 2-2 for recommended values of C1 and C2.

Note 2: A series resistor (R_S) may be required for AT strip cut crystals.

Note 3: R_F varies with the crystal chosen.

FIGURE 2-2: EXTERNAL CLOCK INPUT OPERATION (HS, XT OR LP OSC CONFIGURATION)

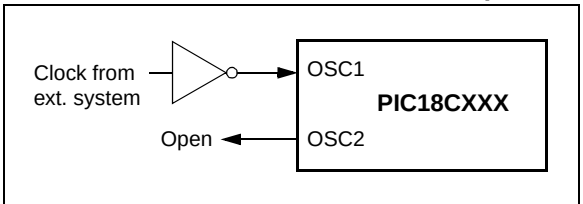

TABLE 2-1: CERAMIC RESONATORS

Ranges Tested:			
Mode	**Freq**	**OSC1**	**OSC2**
XT	455 kHz 2.0 MHz 4.0 MHz	68 - 100 pF 15 - 68 pF 15 - 68 pF	68 - 100 pF 15 - 68 pF 15 - 68 pF
HS	8.0 MHz 16.0 MHz	10 - 68 pF 10 - 22 pF	10 - 68 pF 10 - 22 pF
These values are for design guidance only. See notes at bottom of page.			
Resonators Used:			
455 kHz	Panasonic EFO-A455K04B	± 0.3%	
2.0 MHz	Murata Erie CSA2.00MG	± 0.5%	
4.0 MHz	Murata Erie CSA4.00MG	± 0.5%	
8.0 MHz	Murata Erie CSA8.00MT	± 0.5%	
16.0 MHz	Murata Erie CSA16.00MX	± 0.5%	
All resonators used did not have built-in capacitors.			

TABLE 2-2: CAPACITOR SELECTION FOR CRYSTAL OSCILLATOR

Osc Type	Crystal Freq	Cap. Range C1	Cap. Range C2
LP	32.0 kHz	33 pF	33 pF
	200 kHz	15 pF	15 pF
XT	200 kHz	47-68 pF	47-68 pF
	1.0 MHz	15 pF	15 pF
	4.0 MHz	15 pF	15 pF
HS	4.0 MHz	15 pF	15 pF
	8.0 MHz	15-33 pF	15-33 pF
	20.0 MHz	15-33 pF	15-33 pF
	25.0 MHz	TBD	TBD
These values are for design guidance only. See notes at bottom of page.			
Crystals Used			
32.0 kHz	Epson C-001R32.768K-A	± 20 PPM	
200 kHz	STD XTL 200.000KHz	± 20 PPM	
1.0 MHz	ECS ECS-10-13-1	± 50 PPM	
4.0 MHz	ECS ECS-40-20-1	± 50 PPM	
8.0 MHz	EPSON CA-301 8.000M-C	± 30 PPM	
20.0 MHz	EPSON CA-301 20.000M-C	± 30 PPM	

Note 1: Recommended values of C1 and C2 are identical to the ranges tested (Table 2-1).
2: Higher capacitance increases the stability of the oscillator, but also increases the start-up time.
3: Since each resonator/crystal has its own characteristics, the user should consult the resonator/crystal manufacturer for appropriate values of external components.
4: Rs may be required in HS mode, as well as XT mode, to avoid overdriving crystals with low drive level specification.

2.3 RC Oscillator

For timing insensitive applications, the “RC” and "RCIO" device options offer additional cost savings. The RC oscillator frequency is a function of the supply voltage, the resistor (REXT) and capacitor (CEXT) values and the operating temperature. In addition to this, the oscillator frequency will vary from unit to unit due to normal process parameter variation. Furthermore, the difference in lead frame capacitance between package types will also affect the oscillation frequency, especially for low CEXT values. The user also needs to take into account variation due to tolerance of external R and C components used. Figure 2-3 shows how the R/C combination is connected.

In the RC oscillator mode, the oscillator frequency divided by 4 is available on the OSC2 pin. This signal may be used for test purposes or to synchronize other logic.

FIGURE 2-3: RC OSCILLATOR MODE

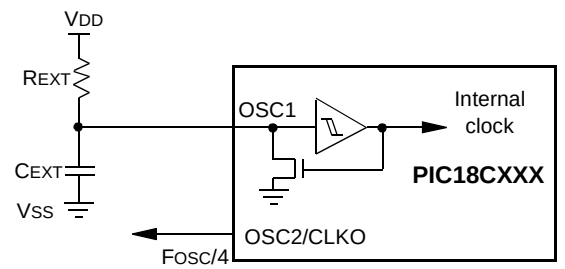

Recommended values: 3 kΩ ≤ REXT ≤ 100 kΩ
CEXT > 20pF

The RCIO oscillator mode functions like the RC mode, except that the OSC2 pin becomes an additional general purpose I/O pin. The I/O pin becomes bit 6 of PORTA (RA6).

2.4 External Clock Input

The EC and ECIO oscillator modes require an external clock source to be connected to the OSC1 pin. The feedback device between OSC1 and OSC2 is turned off in these modes to save current. There is no oscillator startup time required after a Power-On-Reset or after a recovery from SLEEP mode.

In the EC oscillator mode, the oscillator frequency divided by 4 is available on the OSC2 pin. This signal may be used for test purposes or to synchronize other logic. Figure 2-4 shows the pin connections for the EC oscillator mode.

FIGURE 2-4: EXTERNAL CLOCK INPUT OPERATION (EC OSC CONFIGURATION)

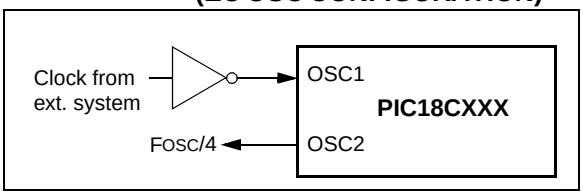

The ECIO oscillator mode functions like the EC mode, except that the OSC2 pin becomes an additional general purpose I/O pin. The I/O pin becomes Bit 6 of PORTA (RA6). Figure 2-5 shows the pin connections for the ECIO oscillator mode.

FIGURE 2-5: EXTERNAL CLOCK INPUT OPERATION (ECIO CONFIGURATION)

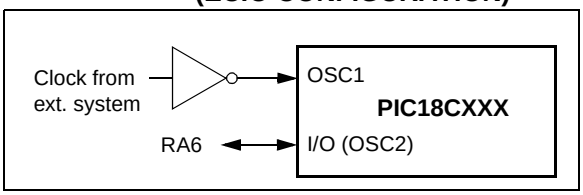

2.5 HS/PLL

A Phase Locked Loop circuit is provided as a programmable option for users that want to multiply the frequency of the incoming crystal oscillator signal by 4. For an input clock frequency of 10 MHz, the internal clock frequency will be multiplied to 40 MHz. This is useful for customers who are concerned with EMI due to high frequency crystals.

The PLL can only be enabled when the oscillator configuration bits are programmed for HS mode. If they are programmed for any other mode, the PLL is not enabled and the system clock will come directly from OSC1.

The PLL is one of the modes of the FOSC<2:0> configuration bits. The oscillator mode is specified during device programming.

A PLL lock timer is used to ensure that the PLL has locked before device execution starts. The PLL lock timer has a time-out that is called TPLL.

FIGURE 2-6: PLL BLOCK DIAGRAM

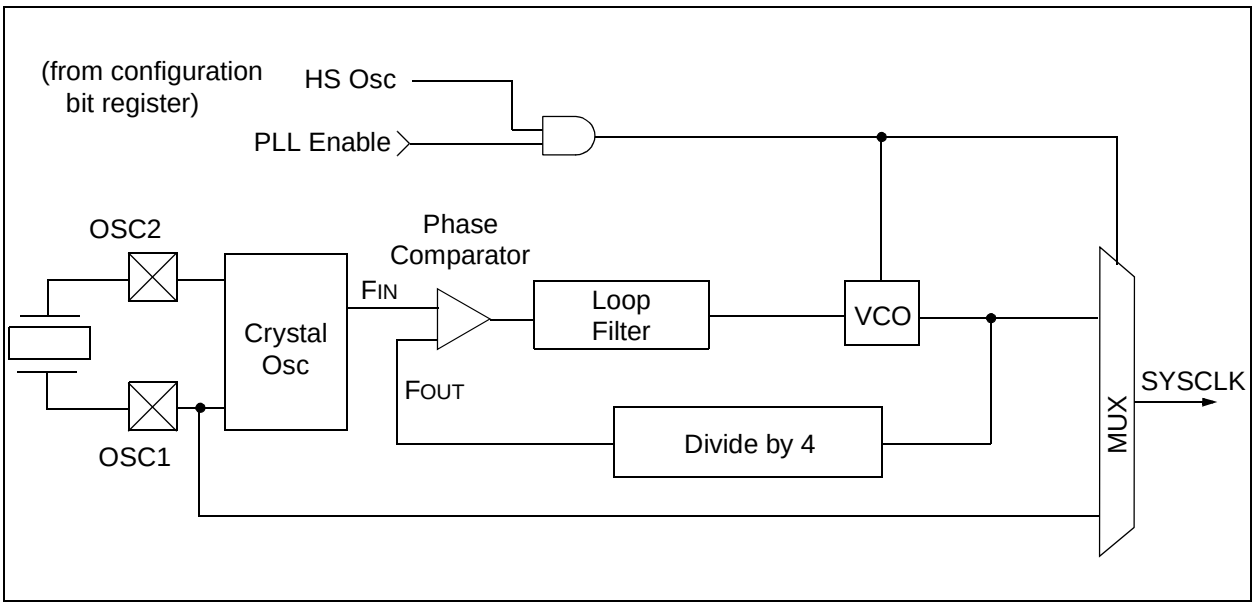

2.6 Oscillator Switching Feature

The PIC18CXX2 devices include a feature that allows the system clock source to be switched from the main oscillator to an alternate low frequency clock source. For the PIC18CXX2 devices, this alternate clock source is the Timer1 oscillator. If a low-frequency crystal (32 KHz, for example) has been attached to the Timer1 oscillator pins and the Timer1 oscillator has been enabled, the device can switch to a low power execution mode. Figure 2-7 shows a block diagram of the system clock sources. The clock switching feature is enabled by programming the Oscillator Switching Enable ($\overline{\text{OSCSEN}}$) bit in Configuration Register1H to a '0'. Clock switching is disabled in an erased device. See Section 9 for further details of the Timer1 oscillator. See Section 18.0 for Configuration Register details.

FIGURE 2-7: DEVICE CLOCK SOURCES

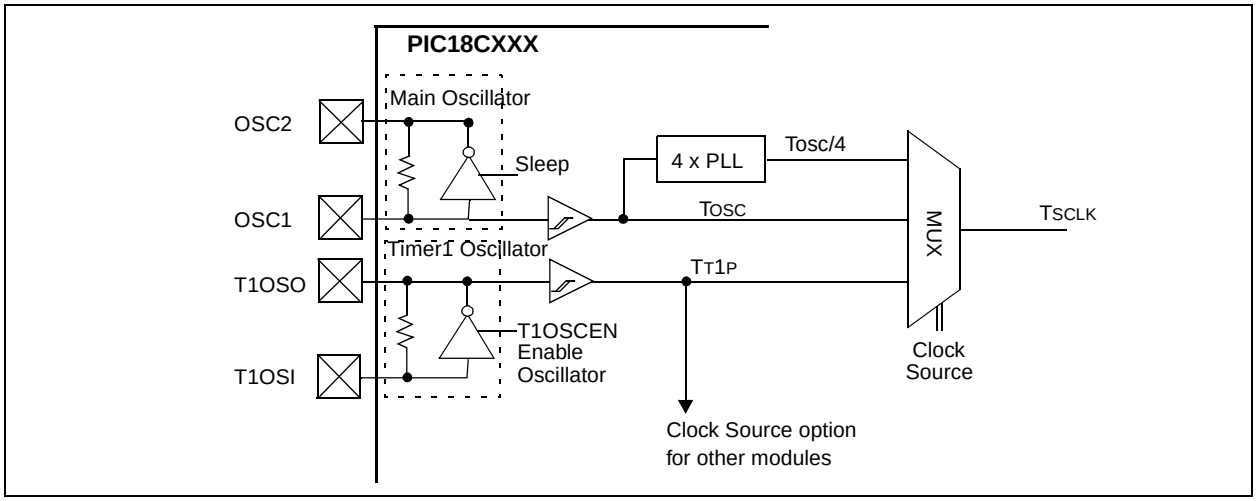

2.6.1 SYSTEM CLOCK SWITCH BIT

The system clock source switching is performed under software control. The system clock switch bit, SCS (OSCCON<0>) controls the clock switching. When the SCS bit is '0', the system clock source comes from the main oscillator that is selected by the FOSC configuration bits in Configuration Register1H. When the SCS bit is set, the system clock source will come from the Timer1 oscillator. The SCS bit is cleared on all forms of reset.

Note:	The Timer1 oscillator must be enabled to switch the system clock source. The Timer1 oscillator is enabled by setting the T1OSCEN bit in the Timer1 control register (T1CON). If the Timer1 oscillator is not enabled, then any write to the SCS bit will be ignored (SCS bit forced cleared) and the main oscillator will continue to be the system clock source.

Register 2-1: OSCCON Register

U-0	U-0	U-0	U-0	U-0	U-0	U-0	R/W-1
—	—	—	—	—	—	—	SCS
bit 7							bit 0

bit 7-1 **Unimplemented:** Read as '0'

bit 0 **SCS:** System Clock Switch bit
when $\overline{\text{OSCSEN}}$ configuration bit = '0' and T1OSCEN bit is set:
1 = Switch to Timer1 Oscillator/Clock pin
0 = Use primary Oscillator/Clock input pin
when $\overline{\text{OSCSEN}}$ and T1OSCEN are in other states:
bit is forced clear

Legend			
R = Readable bit	W = Writable bit	U = Unimplemented bit, read as '0'	
- n = Value at POR reset	'1' = Bit is set	'0' = Bit is cleared	x = Bit is unknown

2.6.2 OSCILLATOR TRANSITIONS

The PIC18CXX2 devices contain circuitry to prevent "glitches" when switching between oscillator sources. Essentially, the circuitry waits for eight rising edges of the clock source that the processor is switching to. This ensures that the new clock source is stable and that its pulse width will not be less than the shortest pulse width of the two clock sources.

A timing diagram indicating the transition from the main oscillator to the Timer1 oscillator is shown in Figure 2-8. The Timer1 oscillator is assumed to be running all the time. After the SCS bit is set, the processor is frozen at the next occurring Q1 cycle. After eight synchronization cycles are counted from the Timer1 oscillator, operation resumes. No additional delays are required after the synchronization cycles.

FIGURE 2-8: TIMING DIAGRAM FOR TRANSITION FROM OSC1 TO TIMER1 OSCILLATOR

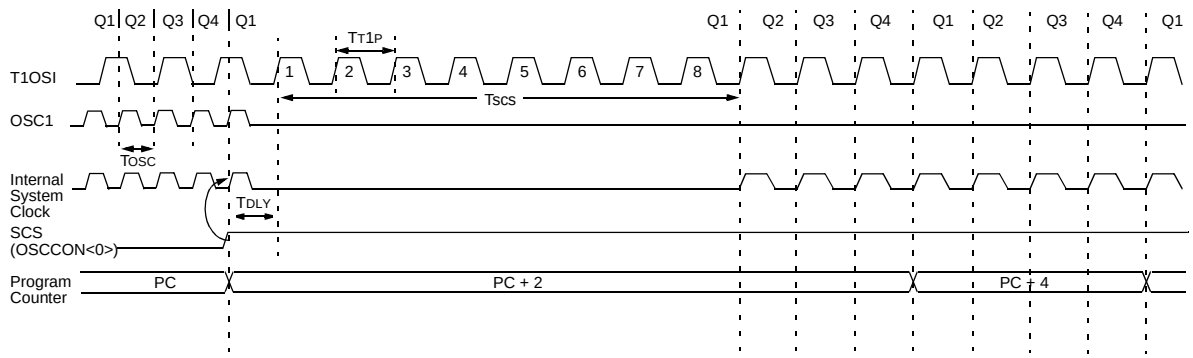

Note 1: Delay on internal system clock is eight oscillator cycles for synchronization.

The sequence of events that takes place when switching from the Timer1 oscillator to the main oscillator will depend on the mode of the main oscillator. In addition to eight clock cycles of the main oscillator, additional delays may take place.

If the main oscillator is configured for an external crystal (HS, XT, LP), then the transition will take place after an oscillator startup time (TOST) has occurred. A timing diagram indicating the transition from the Timer1 oscillator to the main oscillator for HS, XT and LP modes is shown in Figure 2-9.

FIGURE 2-9: TIMING FOR TRANSITION BETWEEN TIMER1 AND OSC1 (HS,XT,LP)

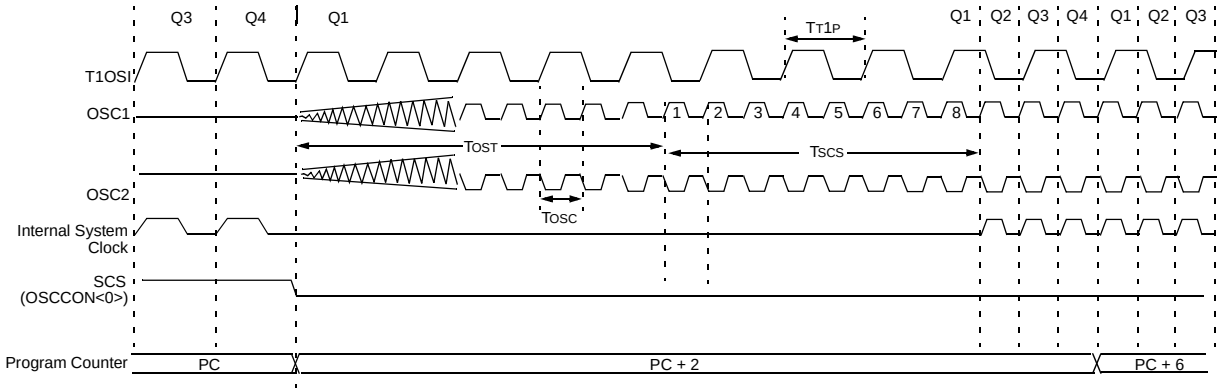

Note 1: TOST = 1024TOSC (drawing not to scale).

If the main oscillator is configured for HS-PLL mode, an oscillator startup time (TOST) plus an additional PLL timeout (TPLL) will occur. The PLL timeout is typically 2 ms and allows the PLL to lock to the main oscillator frequency. A timing diagram indicating the transition from the Timer1 oscillator to the main oscillator for HS-PLL mode is shown in Figure 2-10.

FIGURE 2-10: TIMING FOR TRANSITION BETWEEN TIMER1 AND OSC1 (HS WITH PLL)

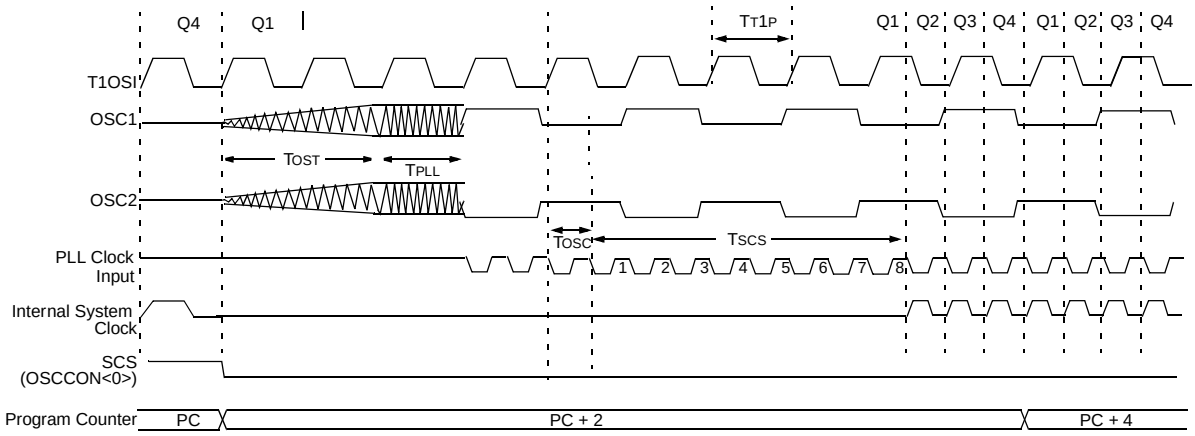

Note 1: TOST = 1024TOSC (drawing not to scale).

If the main oscillator is configured in the RC, RCIO, EC or ECIO modes, there is no oscillator startup timeout. Operation will resume after eight cycles of the main oscillator have been counted. A timing diagram indicating the transition from the Timer1 oscillator to the main oscillator for RC, RCIO, EC and ECIO modes is shown in Figure 2-11.

FIGURE 2-11: TIMING FOR TRANSITION BETWEEN TIMER1 AND OSC1 (RC, EC)

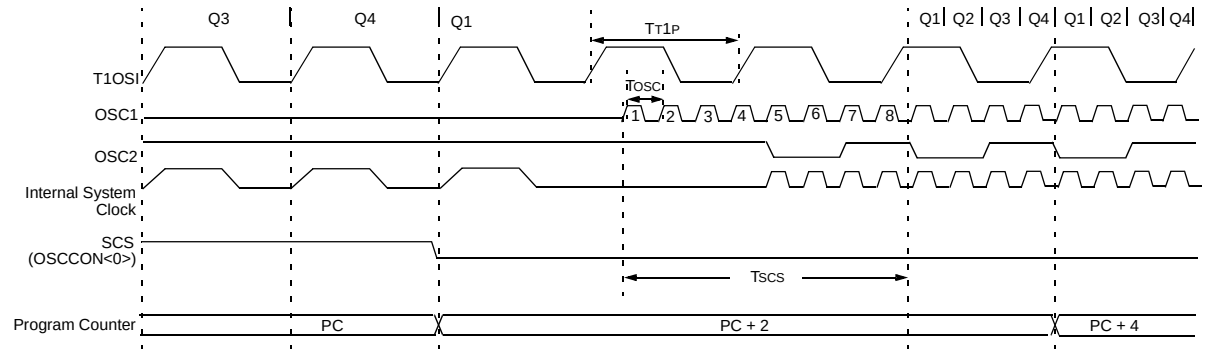

Note 1: RC oscillator mode assumed.

2.7 Effects of Sleep Mode on the On-chip Oscillator

When the device executes a SLEEP instruction, the on-chip clocks and oscillator are turned off and the device is held at the beginning of an instruction cycle (Q1 state). With the oscillator off, the OSC1 and OSC2 signals will stop oscillating. Since all the transistor switching currents have been removed, sleep mode achieves the lowest current consumption of the device (only leakage currents). Enabling any on-chip feature that will operate during sleep will increase the current consumed during sleep. The user can wake from SLEEP through external reset, Watchdog Timer Reset or through an interrupt.

TABLE 2-3: OSC1 AND OSC2 PIN STATES IN SLEEP MODE

OSC Mode	OSC1 Pin	OSC2 Pin
RC	Floating, external resistor should pull high	At logic low
RCIO	Floating, external resistor should pull high	Configured as Port A, bit 6
ECIO	Floating	Configured as Port A, bit 6
EC	Floating	At logic low
LP, XT, and HS	Feedback inverter disabled, at quiescent voltage level	Feedback inverter disabled, at quiescent voltage level

See Table 3-1, in the **"Reset"** section, for time-outs due to Sleep and $\overline{\text{MCLR}}$ reset.

2.8 Power-up Delays

Power up delays are controlled by two timers, so that no external reset circuitry is required for most applications. The delays ensure that the device is kept in RESET until the device power supply and clock are stable. For additional information on RESET operation, see the "Reset" section.

The first timer is the Power-up Timer (PWRT), which optionally provides a fixed delay of 72 ms (nominal) on power-up only (POR and BOR). The second timer is the Oscillator Start-up Timer OST, intended to keep the chip in RESET until the crystal oscillator is stable.

With the PLL enabled (HS/PLL oscillator mode), the time-out sequence following a power-on reset is different from other oscillator modes. The time-out sequence is as follows: First the PWRT time-out is invoked after a POR time delay has expired. Then the Oscillator Start-up Timer (OST) is invoked. However, this is still not a sufficient amount of time to allow the PLL to lock at high frequencies. The PWRT timer is used to provide an additional fixed 2ms (nominal) time-out to allow the PLL ample time to lock to the incoming clock frequency.

NOTES:

3.0 RESET

The PIC18CXXX differentiates between various kinds of reset:

a) Power-on Reset (POR)
b) $\overline{\text{MCLR}}$ reset during normal operation
c) $\overline{\text{MCLR}}$ reset during SLEEP
d) Watchdog Timer (WDT) Reset (during normal operation)
e) Programmable Brown-out Reset (BOR)
f) Reset Instruction
g) Stack Full reset
h) Stack Underflow reset

Most registers are unaffected by a reset. Their status is unknown on POR and unchanged by all other resets. The other registers are forced to a “reset state” on Power-on Reset, $\overline{\text{MCLR}}$, WDT reset, Brown-out Reset, $\overline{\text{MCLR}}$ reset during SLEEP and by the RESET instruction.

Most registers are not affected by a WDT wake-up, since this is viewed as the resumption of normal operation. Status bits from the RCON register, $\overline{\text{RI}}$, $\overline{\text{TO}}$, $\overline{\text{PD}}$, $\overline{\text{POR}}$ and $\overline{\text{BOR}}$, are set or cleared differently in different reset situations, as indicated in Table 3-2. These bits are used in software to determine the nature of the reset. See Table 3-3 for a full description of the reset states of all registers.

A simplified block diagram of the on-chip reset circuit is shown in Figure 3-1.

The Enhanced MCU devices have a $\overline{\text{MCLR}}$ noise filter in the $\overline{\text{MCLR}}$ reset path. The filter will detect and ignore small pulses.

A WDT reset does not drive $\overline{\text{MCLR}}$ pin low.

FIGURE 3-1: SIMPLIFIED BLOCK DIAGRAM OF ON-CHIP RESET CIRCUIT

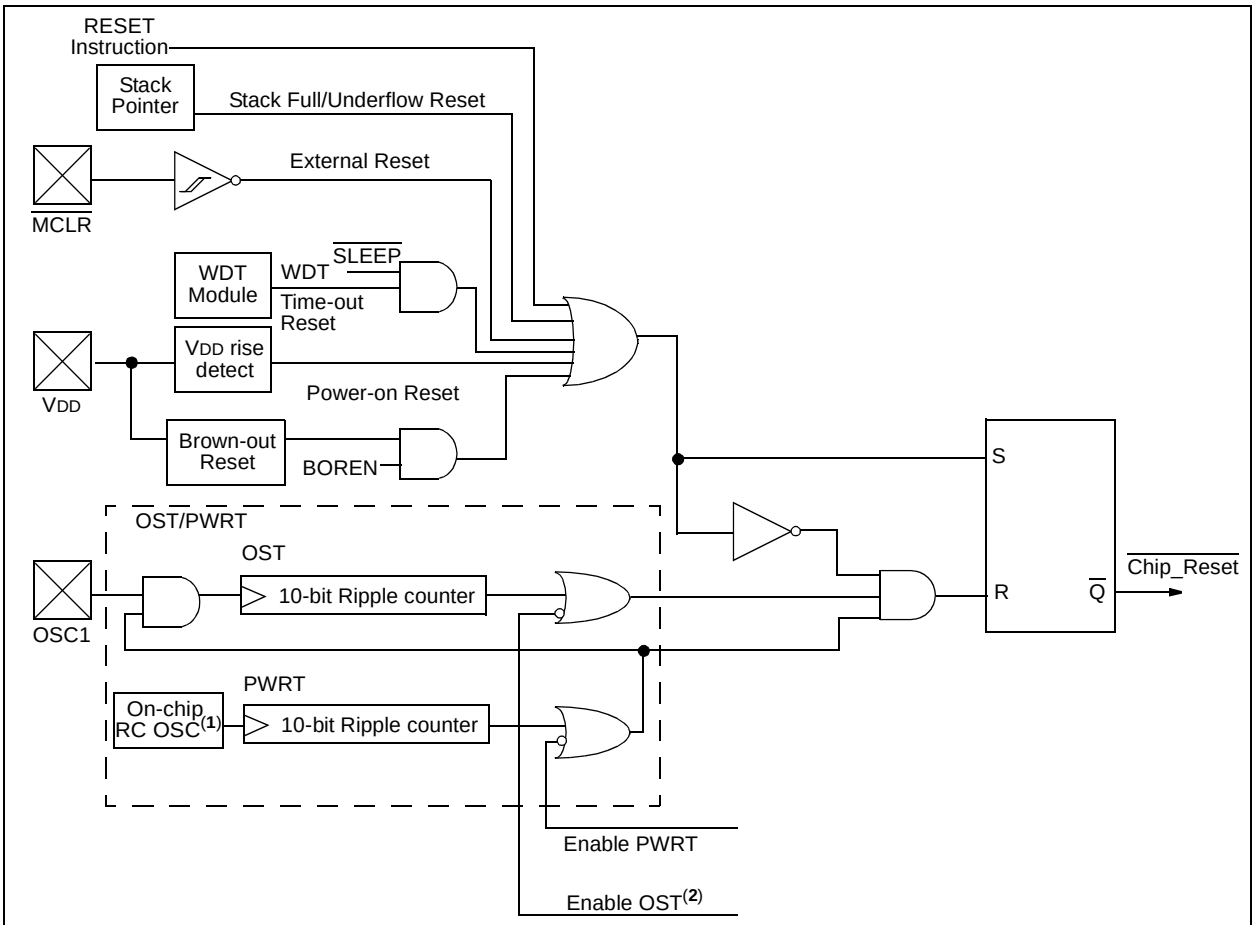

Note 1: This is a separate oscillator from the RC oscillator of the CLKIN pin.
2: See Table 3-1 for time-out situations.

3.1 Power-On Reset (POR)

A Power-on Reset pulse is generated on-chip when VDD rise is detected. To take advantage of the POR circuitry, just tie the MCLR pin directly (or through a resistor) to VDD. This will eliminate external RC components usually needed to create a Power-on Reset delay. A maximum rise time for VDD is specified (parameter D004). For a slow rise time, see Figure 3-2.

When the device starts normal operation (exits the reset condition), device operating parameters (voltage, frequency, temperature,...) must be met to ensure operation. If these conditions are not met, the device must be held in reset until the operating conditions are met. Brown-out Reset may be used to meet the voltage start-up condition.

FIGURE 3-2: EXTERNAL POWER-ON RESET CIRCUIT (FOR SLOW VDD POWER-UP)

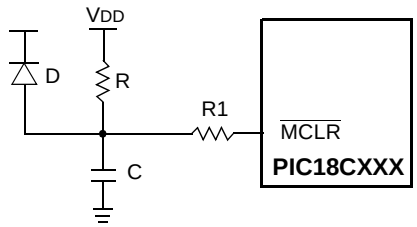

Note 1: External Power-on Reset circuit is required only if the VDD power-up slope is too slow. The diode D helps discharge the capacitor quickly when VDD powers down.

2: R < 40 kΩ is recommended to make sure that the voltage drop across R does not violate the device's electrical specification.

3: R1 = 100Ω to 1 kΩ will limit any current flowing into MCLR from external capacitor C in the event of MCLR/VPP pin breakdown due to Electrostatic Discharge (ESD) or Electrical Overstress (EOS).

3.2 Power-up Timer (PWRT)

The Power-up Timer provides a fixed nominal time-out (parameter #33) only on power-up from the POR. The Power-up Timer operates on an internal RC oscillator. The chip is kept in reset as long as the PWRT is active. The PWRT's time delay allows VDD to rise to an acceptable level. A configuration bit is provided to enable/disable the PWRT.

The power-up time delay will vary from chip-to-chip due to VDD, temperature and process variation. See DC parameter #33 for details.

3.3 Oscillator Start-up Timer (OST)

The Oscillator Start-up Timer (OST) provides 1024 oscillator cycle (from OSC1 input) delay after the PWRT delay is over (parameter #32). This ensures that the crystal oscillator or resonator has started and stabilized.

The OST time-out is invoked only for XT, LP and HS modes and only on Power-on Reset or wake-up from SLEEP.

3.4 PLL Lock Timeout

With the PLL enabled, the timeout sequence following a power-on reset is different from other oscillator modes. A portion of the Power-up Timer is used to provide a fixed timeout that is sufficient for the PLL to lock to the main oscillator frequency. This PLL lock timeout (TPLL) is typically 2 ms and follows the oscillator startup timeout (OST).

3.5 Brown-Out Reset (BOR)

A configuration bit, BOREN, can disable (if clear/programmed) or enable (if set) the Brown-out Reset circuitry. If VDD falls below parameter D005 for greater than parameter #35, the brown-out situation will reset the chip. A reset may not occur if VDD falls below parameter D005 for less than parameter #35. The chip will remain in Brown-out Reset until VDD rises above BVDD. The Power-up Timer will then be invoked and will keep the chip in RESET an additional time delay (parameter #33). If VDD drops below BVDD while the Power-up Timer is running, the chip will go back into a Brown-out Reset and the Power-up Timer will be initialized. Once VDD rises above BVDD, the Power-up Timer will execute the additional time delay.

3.6 Time-out Sequence

On power-up, the time-out sequence is as follows: First, PWRT time-out is invoked after the POR time delay has expired. Then, OST is activated. The total time-out will vary based on oscillator configuration and the status of the PWRT. For example, in RC mode with the PWRT disabled, there will be no time-out at all. Figure 3-3, Figure 3-4, Figure 3-5, Figure 3-6 and Figure 3-7 depict time-out sequences on power-up.

Since the time-outs occur from the POR pulse, if $\overline{\text{MCLR}}$ is kept low long enough, the time-outs will expire. Bringing $\overline{\text{MCLR}}$ high will begin execution immediately (Figure 3-5). This is useful for testing purposes or to synchronize more than one PIC18CXXX device operating in parallel.

Table 3-2 shows the reset conditions for some Special Function Registers, while Table 3-3 shows the reset conditions for all the registers.

TABLE 3-1: TIME-OUT IN VARIOUS SITUATIONS

Oscillator Configuration	Power-up (2)		Brown-out (2)	Wake-up from SLEEP or Oscillator Switch
	$\overline{\text{PWRTE}}$ = 0	$\overline{\text{PWRTE}}$ = 1		
HS with PLL enabled (1)	72 ms + 1024Tosc + 2ms	1024Tosc + 2 ms	72 ms + 1024Tosc + 2ms	1024Tosc + 2 ms
HS, XT, LP	72 ms + 1024Tosc	1024Tosc	72 ms + 1024Tosc	1024Tosc
EC	72 ms	—	72 ms	—
External RC	72 ms	—	72 ms	—

Note 1: 2 ms = Nominal time required for the 4x PLL to lock.
2: 72 ms is the nominal power-up timer delay

Register 3-1: RCON Register Bits and Positions

R/W-0	R/W-0	U-0	R/W-1	R/W-1	R/W-1	R/W-1	R/W-1
IPEN	LWRT	—	$\overline{\text{RI}}$	$\overline{\text{TO}}$	$\overline{\text{PD}}$	$\overline{\text{POR}}$	$\overline{\text{BOR}}$
bit 7							bit 0

TABLE 3-2: STATUS BITS, THEIR SIGNIFICANCE AND THE INITIALIZATION CONDITION FOR RCON REGISTER

Condition	Program Counter	RCON Register	$\overline{\text{RI}}$	$\overline{\text{TO}}$	$\overline{\text{PD}}$	$\overline{\text{POR}}$	$\overline{\text{BOR}}$	STKFUL	STKUNF
Power-on Reset	0000h	00-1 1100	1	1	1	0	0	u	u
$\overline{\text{MCLR}}$ Reset during normal operation	0000h	00-u uuuu	u	u	u	u	u	u	u
Software Reset during normal operation	0000h	0u-0 uuuu	0	u	u	u	u	u	u
Stack Full Reset during normal operation	0000h	0u-u uu11	u	u	u	u	u	u	1
Stack Underflow Reset during normal operation	0000h	0u-u uu11	u	u	u	u	u	1	u
$\overline{\text{MCLR}}$ Reset during SLEEP	0000h	00-u 10uu	u	1	0	u	u	u	u
WDT Reset	0000h	0u-u 01uu	1	0	1	u	u	u	u
WDT Wake-up	PC + 2	uu-u 00uu	u	0	0	u	u	u	u
Brown-out Reset	0000h	0u-1 11u0	1	1	1	1	0	u	u
Interrupt wake-up from SLEEP	PC + 2(1)	uu-u 00uu	u	1	0	u	u	u	u

Legend: u = unchanged, x = unknown, — = unimplemented bit read as '0'.
Note 1: When the wake-up is due to an interrupt and the GIEH or GIEL bits are set, the PC is loaded with the interrupt vector (0x000008h or 0x000018h).

TABLE 3-3: INITIALIZATION CONDITIONS FOR ALL REGISTERS

Register	Applicable Devices				Power-on Reset, Brown-out Reset	$\overline{\text{MCLR}}$ Resets WDT Reset Reset Instruction Stack Resets	Wake-up via WDT or Interrupt
TOSU	242	442	252	452	---0 0000	---0 0000	---0 uuuu(3)
TOSH	242	442	252	452	0000 0000	0000 0000	uuuu uuuu(3)
TOSL	242	442	252	452	0000 0000	0000 0000	uuuu uuuu(3)
STKPTR	242	442	252	452	00-0 0000	00-0 0000	uu-u uuuu(3)
PCLATU	242	442	252	452	---0 0000	---0 0000	---u uuuu
PCLATH	242	442	252	452	0000 0000	0000 0000	uuuu uuuu
PCL	242	442	252	452	0000 0000	0000 0000	PC + 2(2)
TBLPTRU	242	442	252	452	--00 0000	--00 0000	--uu uuuu
TBLPTRH	242	442	252	452	0000 0000	0000 0000	uuuu uuuu
TBLPTRL	242	442	252	452	0000 0000	0000 0000	uuuu uuuu
TABLAT	242	442	252	452	0000 0000	0000 0000	uuuu uuuu
PRODH	242	442	252	452	xxxx xxxx	uuuu uuuu	uuuu uuuu
PRODL	242	442	252	452	xxxx xxxx	uuuu uuuu	uuuu uuuu
INTCON	242	442	252	452	0000 000x	0000 000u	uuuu uuuu(1)
INTCON2	242	442	252	452	1111 -1-1	1111 -1-1	uuuu -u-u(1)
INTCON3	242	442	252	452	11-0 0-00	11-0 0-00	uu-u u-uu(1)
INDF0	242	442	252	452	N/A	N/A	N/A
POSTINC0	242	442	252	452	N/A	N/A	N/A
POSTDEC0	242	442	252	452	N/A	N/A	N/A
PREINC0	242	442	252	452	N/A	N/A	N/A
PLUSW0	242	442	252	452	N/A	N/A	N/A
FSR0H	242	442	252	452	---- 0000	---- 0000	---- uuuu
FSR0L	242	442	252	452	xxxx xxxx	uuuu uuuu	uuuu uuuu
WREG	242	442	252	452	xxxx xxxx	uuuu uuuu	uuuu uuuu
INDF1	242	442	252	452	N/A	N/A	N/A
POSTINC1	242	442	252	452	N/A	N/A	N/A
POSTDEC1	242	442	252	452	N/A	N/A	N/A
PREINC1	242	442	252	452	N/A	N/A	N/A
PLUSW1	242	442	252	452	N/A	N/A	N/A

Legend: u = unchanged, x = unknown, - = unimplemented bit, read as '0', q = value depends on condition

Note 1: One or more bits in the INTCONx or PIRx registers will be affected (to cause wake-up).

2: When the wake-up is due to an interrupt and the GIEL or GIEH bit is set, the PC is loaded with the interrupt vector (0008h or 0018h).

3: When the wake-up is due to an interrupt and the GIEL or GIEH bit is set, the TOSU, TOSH and TOSL are updated with the current value of the PC. The STKPTR is modified to point to the next location in the hardware stack.

4: See Table 3-2 for reset value for specific condition.

5: Bit 6 of PORTA, LATA, and TRISA are enabled in ECIO and RCIO oscillator modes only. In all other oscillator modes, they are disabled and read '0'.

6: The long write enable is only reset on a POR or $\overline{\text{MCLR}}$ reset.

7: Bit 6 of PORTA, LATA and TRISA are not available on all devices. When unimplemented, they are read '0'.

TABLE 3-3: INITIALIZATION CONDITIONS FOR ALL REGISTERS (Cont.'d)

Register	Applicable Devices				Power-on Reset, Brown-out Reset	$\overline{\text{MCLR}}$ Resets WDT Reset Reset Instruction Stack Resets	Wake-up via WDT or Interrupt
FSR1H	242	442	252	452	---- 0000	---- 0000	---- uuuu
FSR1L	242	442	252	452	xxxx xxxx	uuuu uuuu	uuuu uuuu
BSR	242	442	252	452	---- 0000	---- 0000	---- uuuu
INDF2	242	442	252	452	N/A	N/A	N/A
POSTINC2	242	442	252	452	N/A	N/A	N/A
POSTDEC2	242	442	252	452	N/A	N/A	N/A
PREINC2	242	442	252	452	N/A	N/A	N/A
PLUSW2	242	442	252	452	N/A	N/A	N/A
FSR2H	242	442	252	452	---- 0000	---- 0000	---- uuuu
FSR2L	242	442	252	452	xxxx xxxx	uuuu uuuu	uuuu uuuu
STATUS	242	442	252	452	---x xxxx	---u uuuu	---u uuuu
TMR0H	242	442	252	452	xxxx xxxx	uuuu uuuu	uuuu uuuu
TMR0L	242	442	252	452	xxxx xxxx	uuuu uuuu	uuuu uuuu
T0CON	242	442	252	452	1111 1111	1111 1111	uuuu uuuu
OSCCON	242	442	252	452	---- ---0	---- ---0	---- ---u
LVDCON	242	442	252	452	--00 0101	--00 0101	--uu uuuu
WDTCON	242	442	252	452	---- ---0	---- ---0	---- ---u
RCON(4, 6)	242	442	252	452	00-1 11q0	00-1 qquu	uu-u qquu
TMR1H	242	442	252	452	xxxx xxxx	uuuu uuuu	uuuu uuuu
TMR1L	242	442	252	452	xxxx xxxx	uuuu uuuu	uuuu uuuu
T1CON	242	442	252	452	0-00 0000	u-uu uuuu	u-uu uuuu
TMR2	242	442	252	452	xxxx xxxx	uuuu uuuu	uuuu uuuu
PR2	242	442	252	452	1111 1111	1111 1111	1111 1111
T2CON	242	442	252	452	-000 0000	-000 0000	-uuu uuuu
SSPBUF	242	442	252	452	xxxx xxxx	uuuu uuuu	uuuu uuuu
SSPADD	242	442	252	452	0000 0000	0000 0000	uuuu uuuu
SSPSTAT	242	442	252	452	0000 0000	0000 0000	uuuu uuuu
SSPCON1	242	442	252	452	0000 0000	0000 0000	uuuu uuuu
SSPCON2	242	442	252	452	0000 0000	0000 0000	uuuu uuuu

Legend: u = unchanged, x = unknown, - = unimplemented bit, read as '0', q = value depends on condition

Note 1: One or more bits in the INTCONx or PIRx registers will be affected (to cause wake-up).

2: When the wake-up is due to an interrupt and the GIEL or GIEH bit is set, the PC is loaded with the interrupt vector (`0008h or 0018h`).

3: When the wake-up is due to an interrupt and the GIEL or GIEH bit is set, the TOSU, TOSH and TOSL are updated with the current value of the PC. The STKPTR is modified to point to the next location in the hardware stack.

4: See Table 3-2 for reset value for specific condition.

5: Bit 6 of PORTA, LATA, and TRISA are enabled in ECIO and RCIO oscillator modes only. In all other oscillator modes, they are disabled and read '0'.

6: The long write enable is only reset on a POR or $\overline{\text{MCLR}}$ reset.

7: Bit 6 of PORTA, LATA and TRISA are not available on all devices. When unimplemented, they are read '0'.

TABLE 3-3: INITIALIZATION CONDITIONS FOR ALL REGISTERS (Cont.'d)

Register	Applicable Devices				Power-on Reset, Brown-out Reset	$\overline{\text{MCLR}}$ Resets WDT Reset Reset Instruction Stack Resets	Wake-up via WDT or Interrupt
ADRESH	242	442	252	452	xxxx xxxx	uuuu uuuu	uuuu uuuu
ADRESL	242	442	252	452	xxxx xxxx	uuuu uuuu	uuuu uuuu
ADCON0	242	442	252	452	0000 0000	0000 0000	uuuu uuuu
ADCON1	242	442	252	452	--0- 0000	--0- 0000	--u- uuuu
CCPR1H	242	442	252	452	xxxx xxxx	uuuu uuuu	uuuu uuuu
CCPR1L	242	442	252	452	xxxx xxxx	uuuu uuuu	uuuu uuuu
CCP1CON	242	442	252	452	--00 0000	--00 0000	--uu uuuu
CCPR2H	242	442	252	452	xxxx xxxx	uuuu uuuu	uuuu uuuu
CCPR2L	242	442	252	452	xxxx xxxx	uuuu uuuu	uuuu uuuu
CCP2CON	242	442	252	452	--00 0000	--00 0000	--uu uuuu
TMR3H	242	442	252	452	xxxx xxxx	uuuu uuuu	uuuu uuuu
TMR3L	242	442	252	452	xxxx xxxx	uuuu uuuu	uuuu uuuu
T3CON	242	442	252	452	0000 0000	uuuu uuuu	uuuu uuuu
SPBRG	242	442	252	452	xxxx xxxx	uuuu uuuu	uuuu uuuu
RCREG	242	442	252	452	xxxx xxxx	uuuu uuuu	uuuu uuuu
TXREG	242	442	252	452	xxxx xxxx	uuuu uuuu	uuuu uuuu
TXSTA	242	442	252	452	0000 -01x	0000 -01u	uuuu -uuu
RCSTA	242	442	252	452	0000 000x	0000 000u	uuuu uuuu
IPR2	242	442	252	452	---- 1111	---- 1111	---- uuuu
PIR2	242	442	252	452	---- 0000	---- 0000	---- uuuu(1)
PIE2	242	442	252	452	---- 0000	---- 0000	---- uuuu
IPR1	242	442	252	452	1111 1111	1111 1111	uuuu uuuu
	242	442	252	452	-111 1111	-111 1111	-uuu uuuu
PIR1	242	442	252	452	0000 0000	0000 0000	uuuu uuuu(1)
	242	442	252	452	-000 0000	-000 0000	-uuu uuuu(1)
PIE1	242	442	252	452	0000 0000	0000 0000	uuuu uuuu
	242	442	252	452	-000 0000	-000 0000	-uuu uuuu

Legend: u = unchanged, x = unknown, - = unimplemented bit, read as '0', q = value depends on condition

Note 1: One or more bits in the INTCONx or PIRx registers will be affected (to cause wake-up).

2: When the wake-up is due to an interrupt and the GIEL or GIEH bit is set, the PC is loaded with the interrupt vector (0008h or 0018h).

3: When the wake-up is due to an interrupt and the GIEL or GIEH bit is set, the TOSU, TOSH and TOSL are updated with the current value of the PC. The STKPTR is modified to point to the next location in the hardware stack.

4: See Table 3-2 for reset value for specific condition.

5: Bit 6 of PORTA, LATA, and TRISA are enabled in ECIO and RCIO oscillator modes only. In all other oscillator modes, they are disabled and read '0'.

6: The long write enable is only reset on a POR or $\overline{\text{MCLR}}$ reset.

7: Bit 6 of PORTA, LATA and TRISA are not available on all devices. When unimplemented, they are read '0'.

TABLE 3-3: INITIALIZATION CONDITIONS FOR ALL REGISTERS (Cont.'d)

Register	Applicable Devices				Power-on Reset, Brown-out Reset	$\overline{\text{MCLR}}$ Resets WDT Reset Reset Instruction Stack Resets	Wake-up via WDT or Interrupt
TRISE	242	442	252	452	0000 -111	0000 -111	uuuu -uuu
TRISD	242	442	252	452	1111 1111	1111 1111	uuuu uuuu
TRISC	242	442	252	452	1111 1111	1111 1111	uuuu uuuu
TRISB	242	442	252	452	1111 1111	1111 1111	uuuu uuuu
TRISA(5, 7)	242	442	252	452	-111 1111(5)	-111 1111(5)	-uuu uuuu(5)
LATE	242	442	252	452	---- -xxx	---- -uuu	---- -uuu
LATD	242	442	252	452	xxxx xxxx	uuuu uuuu	uuuu uuuu
LATC	242	442	252	452	xxxx xxxx	uuuu uuuu	uuuu uuuu
LATB	242	442	252	452	xxxx xxxx	uuuu uuuu	uuuu uuuu
LATA(5, 7)	242	442	252	452	-xxx xxxx(5)	-uuu uuuu(5)	-uuu uuuu(5)
PORTE	242	442	252	452	---- -000	---- -000	---- -uuu
PORTD	242	442	252	452	xxxx xxxx	uuuu uuuu	uuuu uuuu
PORTC	242	442	252	452	xxxx xxxx	uuuu uuuu	uuuu uuuu
PORTB	242	442	252	452	xxxx xxxx	uuuu uuuu	uuuu uuuu
PORTA(5, 7)	242	442	252	452	-x0x 0000(5)	-u0u 0000(5)	-uuu uuuu(5)

Legend: u = unchanged, x = unknown, - = unimplemented bit, read as '0', q = value depends on condition

Note 1: One or more bits in the INTCONx or PIRx registers will be affected (to cause wake-up).

2: When the wake-up is due to an interrupt and the GIEL or GIEH bit is set, the PC is loaded with the interrupt vector (0008h or 0018h).

3: When the wake-up is due to an interrupt and the GIEL or GIEH bit is set, the TOSU, TOSH and TOSL are updated with the current value of the PC. The STKPTR is modified to point to the next location in the hardware stack.

4: See Table 3-2 for reset value for specific condition.

5: Bit 6 of PORTA, LATA, and TRISA are enabled in ECIO and RCIO oscillator modes only. In all other oscillator modes, they are disabled and read '0'.

6: The long write enable is only reset on a POR or $\overline{\text{MCLR}}$ reset.

7: Bit 6 of PORTA, LATA and TRISA are not available on all devices. When unimplemented, they are read '0'.

FIGURE 3-3: TIME-OUT SEQUENCE ON POWER-UP ($\overline{MCLR}$ TIED TO V_{DD})

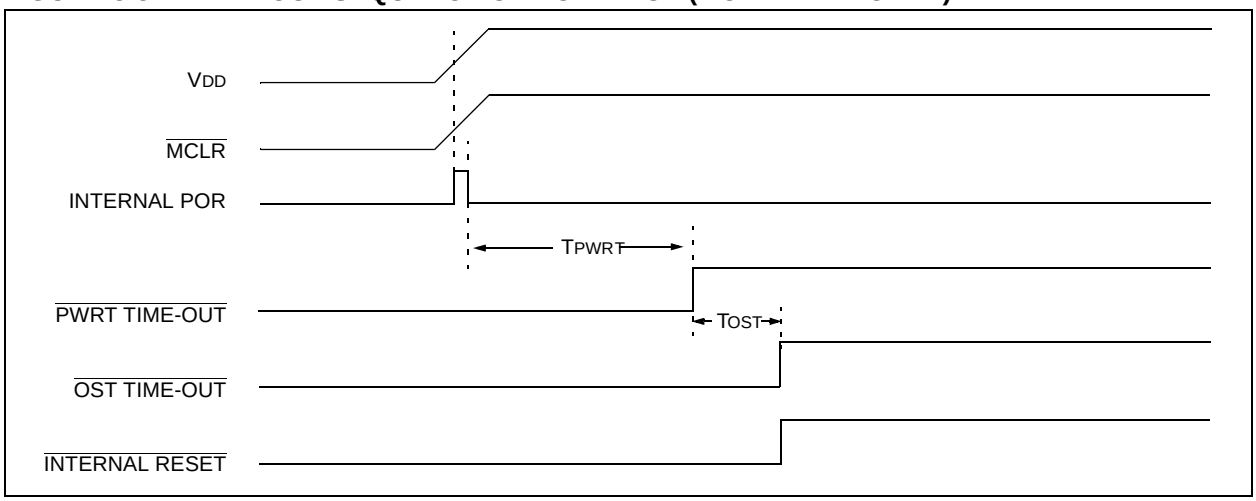

FIGURE 3-4: TIME-OUT SEQUENCE ON POWER-UP ($\overline{MCLR}$ NOT TIED TO V_{DD}): CASE 1

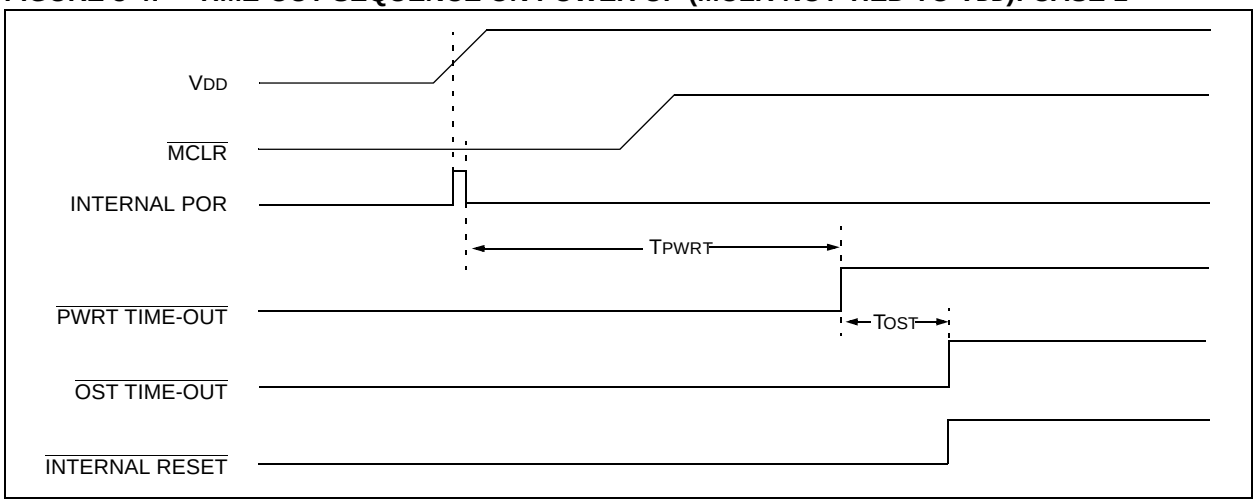

FIGURE 3-5: TIME-OUT SEQUENCE ON POWER-UP ($\overline{MCLR}$ NOT TIED TO V_{DD}): CASE 2

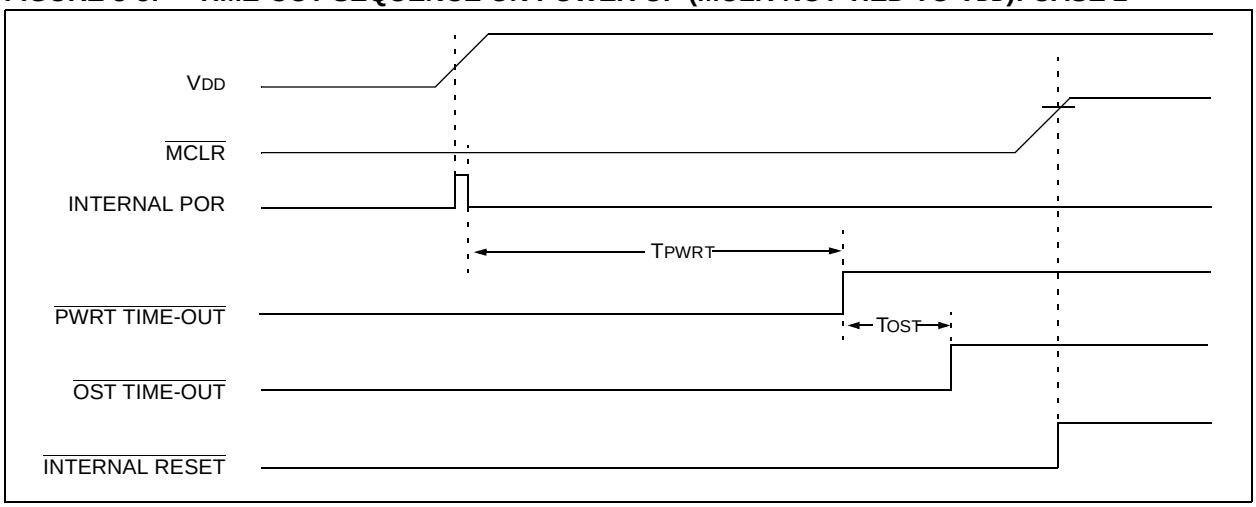

FIGURE 3-6: SLOW RISE TIME ($\overline{MCLR}$ TIED TO VDD)

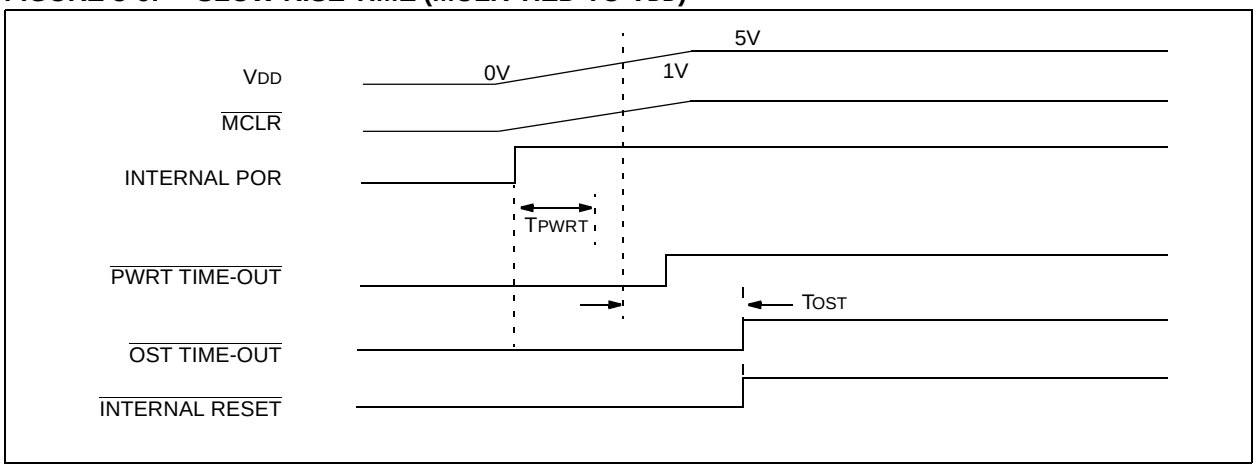

FIGURE 3-7: TIME-OUT SEQUENCE ON POR W/ PLL ENABLED ($\overline{MCLR}$ TIED TO VDD)

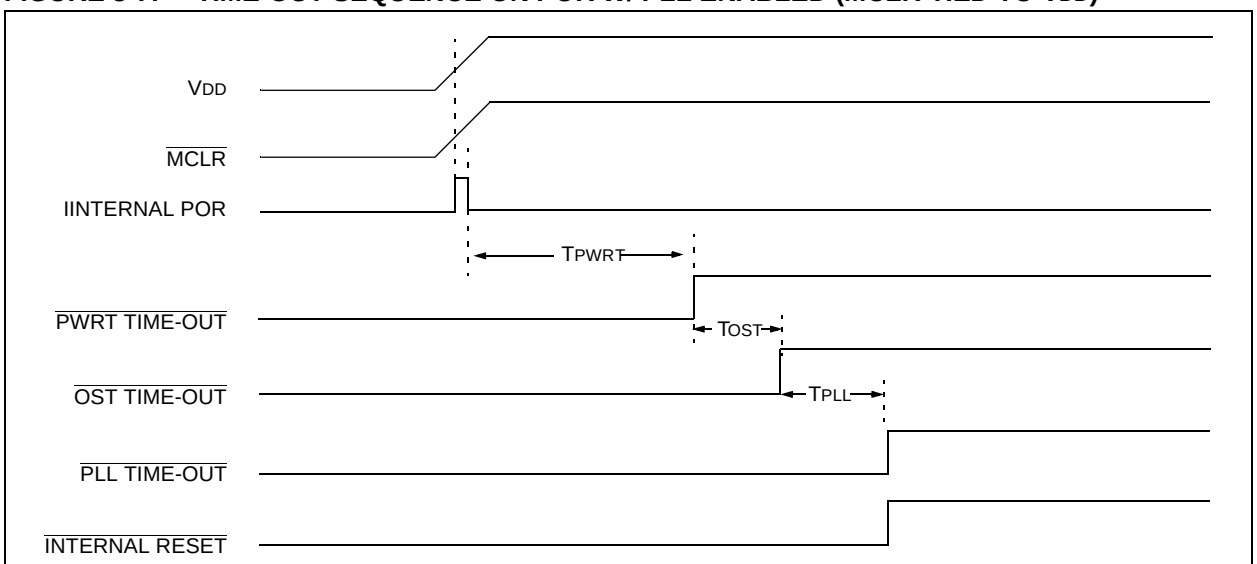

TOST = 1024 clock cycles.

TPLL ≈ 2 ms max. First three stages of the PWRT timer.

NOTES:

4.0 MEMORY ORGANIZATION

There are two memory blocks in Enhanced MCU devices. These memory blocks are:

- Program Memory
- Data Memory

Each block has its own bus so that concurrent access can occur.

4.1 Program Memory Organization

A 21-bit program counter is capable of addressing the 2-Mbyte program memory space. Accessing a location between the physically implemented memory and the 2-Mbyte address will cause a read of all ’0’s (a `NOP` instruction).

PIC18C252 and PIC18C452 have 32-KBytes of EPROM, while PIC18C242 and PIC18C442 have 16-KBytes of EPROM. This means that PIC18CX52 devices can store up to 16K of single word instructions, and PIC18CX42 devices can store up to 8K of single word instructions.

The reset vector address is at 0000h and the interrupt vector addresses are at 0008h and 0018h.

Figure 4-1 shows the Program Memory Map for PIC18C242/442 devices and Figure 4-2 shows the Program Memory Map for PIC18C252/452 devices.

FIGURE 4-1: PROGRAM MEMORY MAP AND STACK FOR PIC18C442/242

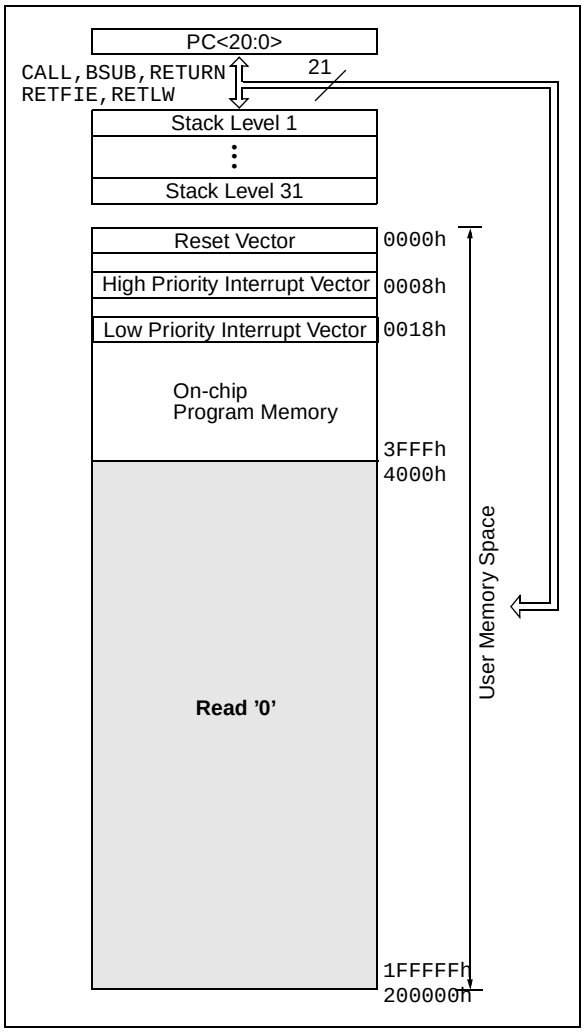

FIGURE 4-2: PROGRAM MEMORY MAP AND STACK FOR PIC18C452/252

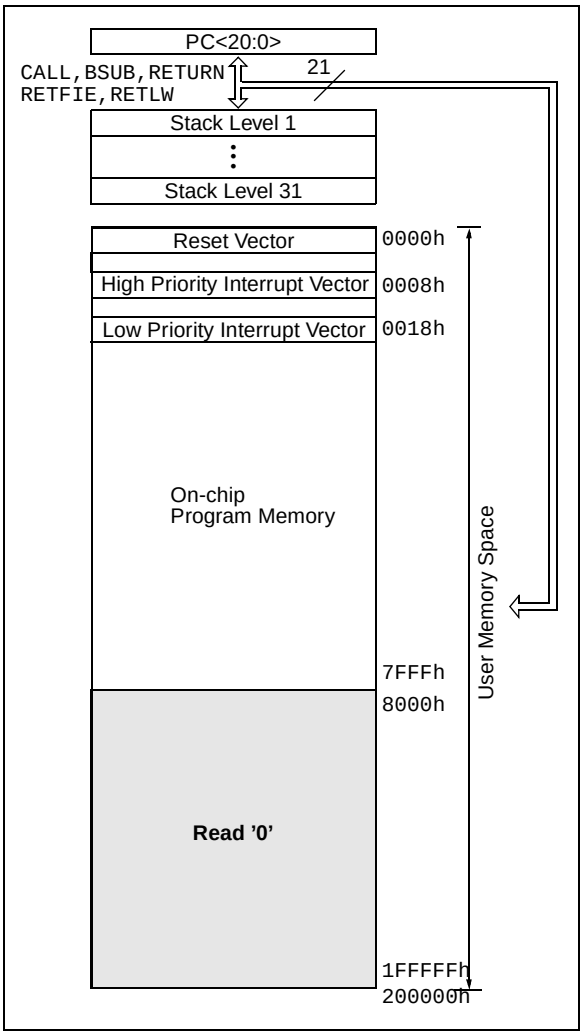

4.2 Return Address Stack

The return address stack allows any combination of up to 31 program calls and interrupts to occur. The PC (Program Counter) is pushed onto the stack when a CALL or RCALL instruction is executed or an interrupt is acknowledged. The PC value is pulled off the stack on a RETURN, RETLW or a RETFIE instruction. PCLATU and PCLATH are not affected by any of the return instructions.

The stack operates as a 31 word by 21-bit RAM and a 5-bit stack pointer, with the stack pointer initialized to 00000b after all resets. There is no RAM associated with stack pointer 00000b. This is only a reset value. During a CALL type instruction causing a push onto the stack, the stack pointer is first incremented and the RAM location pointed to by the stack pointer is written with the contents of the PC. During a RETURN type instruction causing a pop from the stack, the contents of the RAM location pointed to by the STKPTR is transferred to the PC and then the stack pointer is decremented.

The stack space is not part of either program or data space. The stack pointer is readable and writable, and the address on the top of the stack is readable and writable through SFR registers. Data can also be pushed to or popped from the stack using the top-of-stack SFRs. Status bits indicate if the stack pointer is at or beyond the 31 levels provided.

4.2.1 TOP-OF-STACK ACCESS

The top of the stack is readable and writable. Three register locations, TOSU, TOSH and TOSL hold the contents of the stack location pointed to by the STKPTR register. This allows users to implement a software stack if necessary. After a CALL, RCALL or interrupt, the software can read the pushed value by reading the TOSU, TOSH and TOSL registers. These values can be placed on a user defined software stack. At return time, the software can replace the TOSU, TOSH and TOSL and do a return.

The user must disable the global interrupt enable bits during this time to prevent inadvertent stack operations.

4.2.2 RETURN STACK POINTER (STKPTR)

The STKPTR register contains the stack pointer value, the STKFUL (stack full) status bit, and the STKUNF (stack underflow) status bits. Register 4-1 shows the STKPTR register. The value of the stack pointer can be 0 through 31. The stack pointer increments when values are pushed onto the stack and decrements when values are popped off the stack. At reset, the stack pointer value will be 0. The user may read and write the stack pointer value. This feature can be used by a Real Time Operating System for return stack maintenance.

After the PC is pushed onto the stack 31 times (without popping any values off the stack), the STKFUL bit is set. The STKFUL bit can only be cleared in software or by a POR.

The action that takes place when the stack becomes full depends on the state of the STVREN (stack overflow reset enable) configuration bit. Refer to Section 18 for a description of the device configuration bits. If STVREN is set (default) the 31st push will push the (PC + 2) value onto the stack, set the STKFUL bit, and reset the device. The STKFUL bit will remain set and the stack pointer will be set to 0.

If STVREN is cleared, the STKFUL bit will be set on the 31st push and the stack pointer will increment to 31. The 32nd push will overwrite the 31st push (and so on), while STKPTR remains at 31.

When the stack has been popped enough times to unload the stack, the next pop will return a value of zero to the PC and sets the STKUNF bit, while the stack pointer remains at 0. The STKUNF bit will remain set until cleared in software or a POR occurs.

Note:	Returning a value of zero to the PC on an underflow has the effect of vectoring the program to the reset vector, where the stack conditions can be verified and appropriate actions can be taken.

Register 4-1: STKPTR - Stack Pointer Register

R/C-0	R/C-0	U-0	R/W-0	R/W-0	R/W-0	R/W-0	R/W-0
STKFUL	STKUNF	-	SP4	SP3	SP2	SP1	SP0
bit7	6	5	4	3	2	1	bit0

R = Readable bit
W = Writeable bit
C = Clearable bit
U = Unimplemented bit, Read as '0'
- n = Value at POR reset

bit 7(1): **STKFUL**: Stack Full Flag bit
1 = Stack became full or overflowed
0 = Stack has not become full or overflowed

bit 6(1): **STKUNF**: Stack Underflow Flag bit
1 = Stack underflow occurred
0 = Stack underflow did not occur

bit 5: **Unimplemented**: Read as '0'

bit 4-0: **SP4:SP0**: Stack Pointer Location bits

Note 1: Bit 7 and Bit 6 can only be cleared in user software or by a POR.

FIGURE 4-3: RETURN ADDRESS STACK AND ASSOCIATED REGISTERS

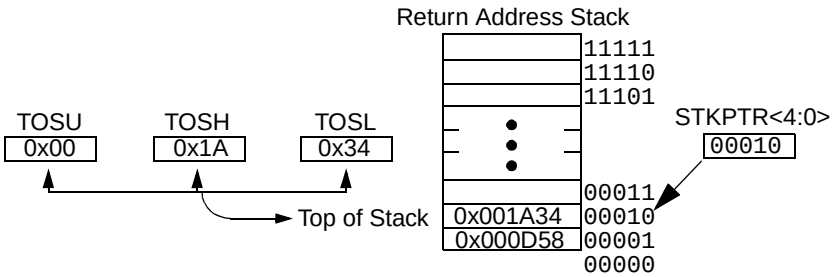

4.2.3 PUSH AND POP INSTRUCTIONS

Since the Top-of-Stack (TOS) is readable and writable, the ability to push values onto the stack and pull values off the stack without disturbing normal program execution is a desirable option. To push the current PC value onto the stack, a PUSH instruction can be executed. This will increment the stack pointer and load the current PC value onto the stack. TOSU, TOSH and TOSL can then be modified to place a return address on the stack.

The ability to pull the TOS value off of the stack and replace it with the value that was previously pushed onto the stack, without disturbing normal execution, is achieved by using the POP instruction. The POP instruction discards the current TOS by decrementing the stack pointer. The previous value pushed onto the stack then becomes the TOS value.

4.2.4 STACK FULL/UNDERFLOW RESETS

These resets are enabled by programming the STVREN configuration bit. When the STVREN bit is disabled, a full or underflow condition will set the appropriate STKFUL or STKUNF bit, but not cause a device reset. When the STVREN bit is enabled, a full or underflow will set the appropriate STKFUL or STKUNF bit and then cause a device reset. The STKFUL or STKUNF bits are only cleared by the user software or a POR reset.

4.3 Fast Register Stack

A "fast interrupt return" option is available for interrupts. A Fast Register Stack is provided for the STATUS, WREG and BSR registers and are only one in depth. The stack is not readable or writable and is loaded with the current value of the corresponding register when the processor vectors for an interrupt. The values in the registers are then loaded back into the working registers if the fast return instruction is used to return from the interrupt.

A low or high priority interrupt source will push values into the stack registers. If both low and high priority interrupts are enabled, the stack registers cannot be used reliably for low priority interrupts. If a high priority interrupt occurs while servicing a low priority interrupt, the stack register valves stored by the low priority interrupt will be overwritten.

If high priority interrupts are not disabled during low priority interrupts, users must save the key registers in software during a low priority interrupt.

If no interrupts are used, the fast register stack can be used to restore the STATUS, WREG and BSR registers at the end of a subroutine call. To use the fast register stack for a subroutine call, a fast call instruction must be executed.

Example 4-1 shows a source code example that uses the fast register stack.

EXAMPLE 4-1: FAST REGISTER STACK CODE EXAMPLE

```
CALL SUB1, FAST     ;STATUS, WREG, BSR
                    ;SAVED IN FAST REGISTER
                    ;STACK
        •
        •

SUB1    •
        •
        •
    RETURN FAST     ;RESTORE VALUES SAVED
                    ;IN FAST REGISTER STACK
```

4.4 PCL, PCLATH and PCLATU

The program counter (PC) specifies the address of the instruction to fetch for execution. The PC is 21-bits wide. The low byte is called the PCL register. This register is readable and writable. The high byte is called the PCH register. This register contains the PC<15:8> bits and is not directly readable or writable. Updates to the PCH register may be performed through the PCLATH register. The upper byte is called PCU. This register contains the PC<20:16> bits and is not directly readable or writable. Updates to the PCU register may be performed through the PCLATU register.

The PC addresses bytes in the program memory. To prevent the PC from becoming misaligned with word instructions, the LSB of PCL is fixed to a value of ’0’. The PC increments by 2 to address sequential instructions in the program memory.

The `CALL`, `RCALL`, `GOTO` and program branch instructions write to the program counter directly. For these instructions, the contents of PCLATH and PCLATU are not transferred to the program counter.

The contents of PCLATH and PCLATU will be transferred to the program counter by an operation that writes PCL. Similarly, the upper two bytes of the program counter will be transferred to PCLATH and PCLATU by an operation that reads PCL. This is useful for computed offsets to the PC. (See Section 4.8.1)

4.5 Clocking Scheme/Instruction Cycle

The clock input (from OSC1) is internally divided by four to generate four non-overlapping quadrature clocks namely Q1, Q2, Q3 and Q4. Internally, the program counter (PC) is incremented every Q1, the instruction is fetched from the program memory and latched into the instruction register in Q4. The instruction is decoded and executed during the following Q1 through Q4. The clocks and instruction execution flow is shown in Figure 4-4.

FIGURE 4-4: CLOCK/INSTRUCTION CYCLE

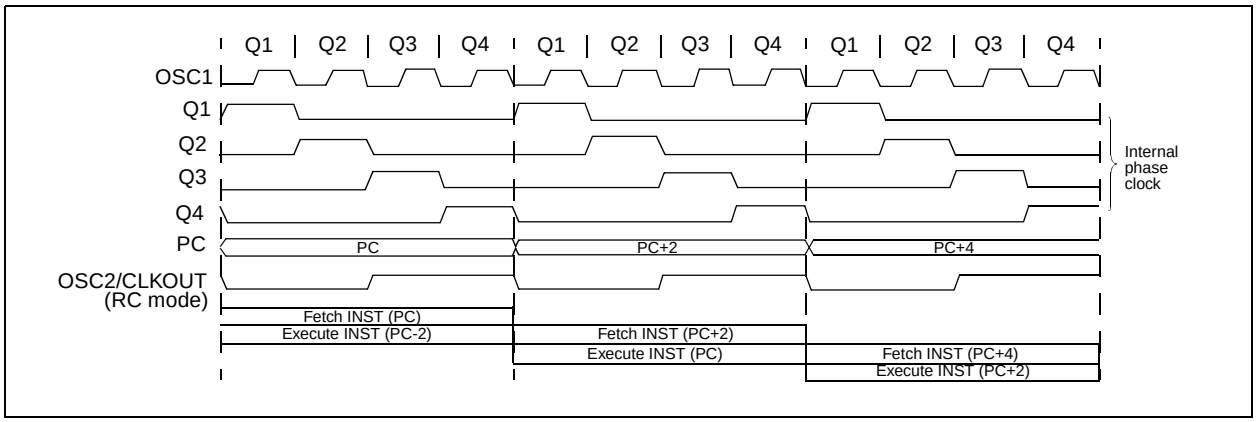

4.6 Instruction Flow/Pipelining

An “Instruction Cycle” consists of four Q cycles (Q1, Q2, Q3 and Q4). The instruction fetch and execute are pipelined such that fetch takes one instruction cycle while decode and execute takes another instruction cycle. However, due to the pipelining, each instruction effectively executes in one cycle. If an instruction causes the program counter to change (e.g. `GOTO`) then two cycles are required to complete the instruction (Example 4-2).

A fetch cycle begins with the program counter (PC) incrementing in Q1.

In the execution cycle, the fetched instruction is latched into the “Instruction Register" (IR) in cycle Q1. This instruction is then decoded and executed during the Q2, Q3, and Q4 cycles. Data memory is read during Q2 (operand read) and written during Q4 (destination write).

EXAMPLE 4-2: INSTRUCTION PIPELINE FLOW

	Tcy0	Tcy1	Tcy2	Tcy3	Tcy4	Tcy5
1. `MOVLW 55h`	Fetch 1	Execute 1				
2. `MOVWF PORTB`		Fetch 2	Execute 2			
3. `BRA SUB_1`			Fetch 3	Execute 3		
4. `BSF PORTA, BIT3 (Forced NOP)`				Fetch 4	Flush	
5. `Instruction @ address SUB_1`					Fetch SUB_1	Execute SUB_1

All instructions are single cycle, except for any program branches. These take two cycles since the fetch instruction is “flushed” from the pipeline while the new instruction is being fetched and then executed.

4.7 Instructions in Program Memory

The program memory is addressed in bytes. Instructions are stored as two bytes or four bytes in program memory. The least significant byte of an instruction word is always stored in a program memory location with an even address (LSB = ’0’). Figure 4-5 shows an example of how instruction words are stored in the program memory. To maintain alignment with instruction boundaries, the PC increments in steps of 2 and the LSB will always read ’0’. (See Section 4.4)

The `CALL` and `GOTO` instructions have an absolute program memory address embedded into the instruction. Since instructions are always stored on word boundaries, the data contained in the instruction is a word address. The word address is written to PC<20:1>, which accesses the desired byte address in program memory. Instruction #2 in Figure 4-5 shows how the instruction "`GOTO 000006h`’ is encoded in the program memory. Program branch instructions which encode a relative address offset operate in the same manner. The offset value stored in a branch instruction represents the number of single word instructions that the PC will be offset by. Section 19.0 provides further details of the instruction set.

FIGURE 4-5: INSTRUCTIONS IN PROGRAM MEMORY

			LSB = 1	LSB = 0	Word Address ↓
Program Memory Byte Locations →					000000h
					000002h
					000004h
					000006h
Instruction 1:	MOVLW	055h	0Fh	55h	000008h
Instruction 2:	GOTO	000006h	EFh	03h	00000Ah
			F0h	00h	00000Ch
Instruction 3:	MOVFF	123h, 456h	C1h	23h	00000Eh
			F4h	56h	000010h
					000012h
					000014h

4.7.1 TWO-WORD INSTRUCTIONS

The PIC18CXX2 devices have 4 two-word instructions: `MOVFF, CALL, GOTO` and `LFSR`. The second word of these instructions has the 4 MSB's set to 1's and is a special kind of `NOP` instruction. The lower 12 bits of the second word contain data to be used by the instruction. If the first word of the instruction is executed, the data in the second word is accessed. If the second word of the instruction is executed by itself (first word was skipped), it will execute as a `NOP`. This action is necessary when the two word instruction is preceded by a conditional instruction that changes the PC. A program example that demonstrates this concept is shown in Example 4-3. Refer to Section 19.0 for further details of the instruction set.

EXAMPLE 4-3: TWO-WORD INSTRUCTIONS

CASE 1:			
Object code	**Source Code**		
`0110 0110 0000 0000`	TSTFSZ	REG1	; is RAM location 0?
`1100 0001 0010 0011`	MOVFF	REG1, REG2	; No, execute 2-word instruction
`1111 0100 0101 0110`			; 2nd operand holds address of REG2
`0010 0100 0000 0000`	ADDWF	REG3	; continue code
CASE 2:			
Object code	**Source Code**		
`0110 0110 0000 0000`	TSTFSZ	REG1	; is RAM location 0?
`1100 0001 0010 0011`	MOVFF	REG1, REG2	; Yes
`1111 0100 0101 0110`			; 2nd operand becomes `NOP`
`0010 0100 0000 0000`	ADDWF	REG3	; continue code

4.8 Lookup Tables

Look-up tables are implemented two ways. These are:

- Computed `GOTO`
- Table Reads

4.8.1 COMPUTED GOTO

A computed `GOTO` is accomplished by adding an offset to the program counter (`ADDWF PCL`).

A lookup table can be formed with an `ADDWF PCL` instruction and a group of `RETLW 0xnn` instructions. WREG is loaded with an offset into the table before executing a call to that table. The first instruction of the called routine is the `ADDWF PCL` instruction. The next instruction executed will be one of the `RETLW 0xnn` instructions that returns the value 0xnn to the calling function.

The offset value (value in WREG) specifies the number of bytes that the program counter should advance.

In this method, only one data byte may be stored in each instruction location and room on the return address stack is required.

4.8.2 TABLE READS/TABLE WRITES

A better method of storing data in program memory allows 2 bytes of data to be stored in each instruction location.

Lookup table data may be stored 2 bytes per program word by using table reads and writes. The table pointer (TBLPTR) specifies the byte address and the table latch (TABLAT) contains the data that is read from or written to program memory. Data is transferred to/from program memory one byte at a time.

A description of the Table Read/Table Write operation is shown in Section 5.0.

4.9 Data Memory Organization

The data memory is implemented as static RAM. Each register in the data memory has a 12-bit address, allowing up to 4096 bytes of data memory. Figure 4-6 and Figure 4-7 show the data memory organization for the PIC18CXX2 devices.

Banking is required to allow more than 256 bytes to be accessed. The data memory map is divided into as many as 16 banks that contain 256 bytes each. The lower 4 bits of the Bank Select Register (BSR<3:0>) select which bank will be accessed. The upper 4 bits for the BSR are not implemented.

The data memory contains Special Function Registers (SFR) and General Purpose Registers (GPR). The SFRs are used for control and status of the controller and peripheral functions, while GPRs are used for data storage and scratch pad operations in the user's application. The SFRs start at the last location of Bank 15 (OxFFF) and grow downwards. Any remaining space beyond the SFRs in the Bank may be implemented as GPRs. GPRs start at the first location of Bank 0 and grow upwards. Any read of an unimplemented location will read as '0's.

The entire data memory may be accessed directly or indirectly. Direct addressing may require the use of the BSR register. Indirect addressing requires the use of the File Select Register (FSR). Each FSR holds a 12-bit address value that can be used to access any location in the Data Memory map without banking.

The instruction set and architecture allow operations across all banks. This may be accomplished by indirect addressing or by the use of the MOVFF instruction. The MOVFF instruction is a two word/two cycle instruction that moves a value from one register to another.

To ensure that commonly used registers (SFRs and select GPRs) can be accessed in a single cycle regardless of the current BSR values, an Access Bank is implemented. A segment of Bank 0 and a segment of Bank 15 comprise the Access RAM. Section 4.10 provides a detailed description of the Access RAM.

4.9.1 GENERAL PURPOSE REGISTER FILE

The register file can be accessed either directly or indirectly. Indirect addressing operates through the File Select Registers (FSR). The operation of indirect addressing is shown in Section 4.12.

Enhanced MCU devices may have banked memory in the GPR area. GPRs are not initialized by a Power-on Reset and are unchanged on all other resets.

Data RAM is available for use as GPR registers by all instructions. The top half of bank 15 (0xF80 to 0xFFF) contains SFRs. All other banks of data memory contain GPR registers starting with bank 0.

4.9.2 SPECIAL FUNCTION REGISTERS

The Special Function Registers (SFRs) are registers used by the CPU and Peripheral Modules for controlling the desired operation of the device. These registers are implemented as static RAM. A list of these registers is given in Table 4-1 and Table 4-2.

The SFRs can be classified into two sets; those associated with the "core" function and those related to the peripheral functions. Those registers related to the "core" are described in this section, while those related to the operation of the peripheral features are described in the section of that peripheral feature.

The SFRs are typically distributed among the peripherals whose functions they control.

The unused SFR locations will be unimplemented and read as '0's. See Table 4-1 for addresses for the SFRs.

FIGURE 4-6: DATA MEMORY MAP FOR PIC18C242/442

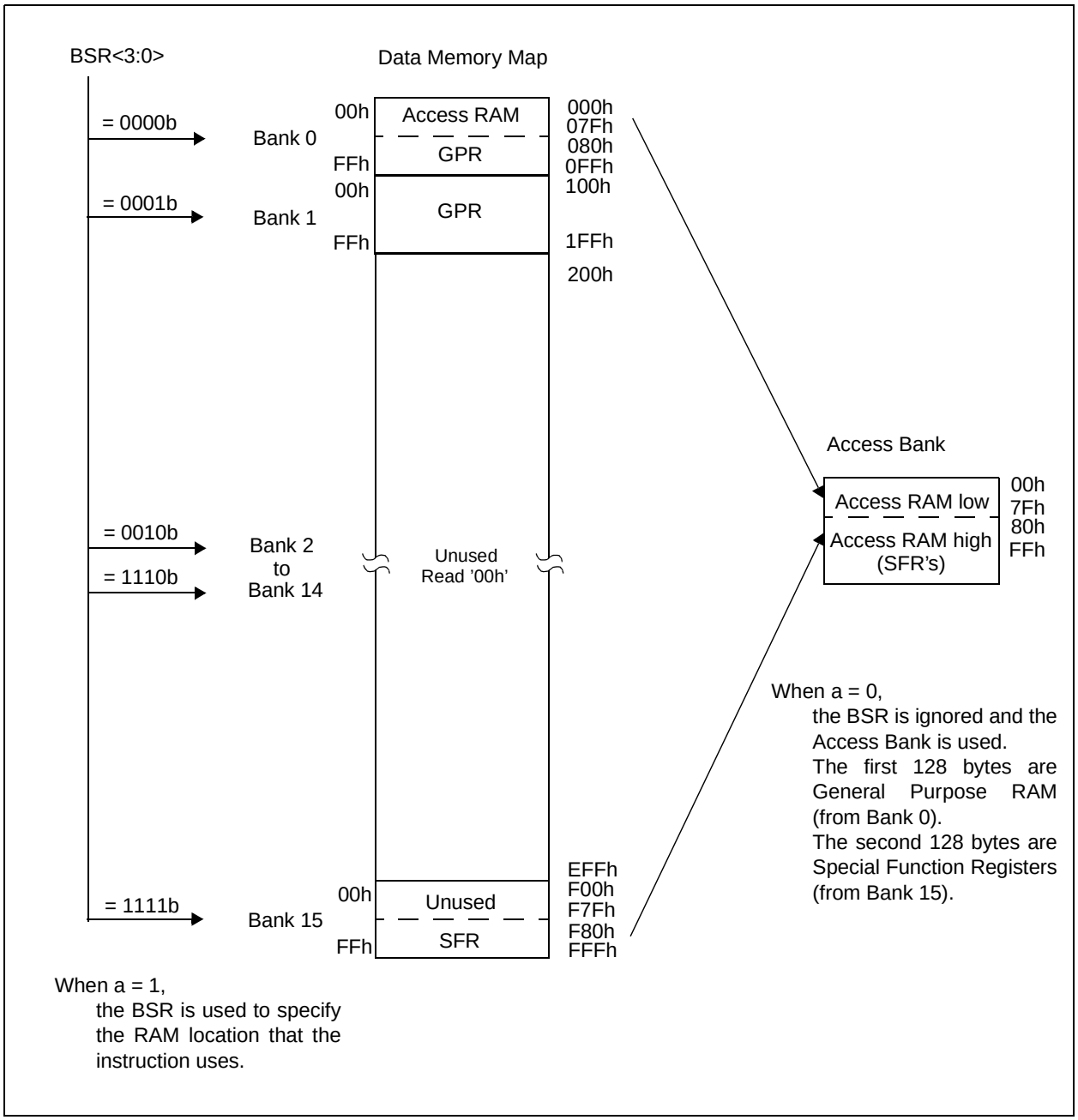

FIGURE 4-7: DATA MEMORY MAP FOR PIC18C252/452

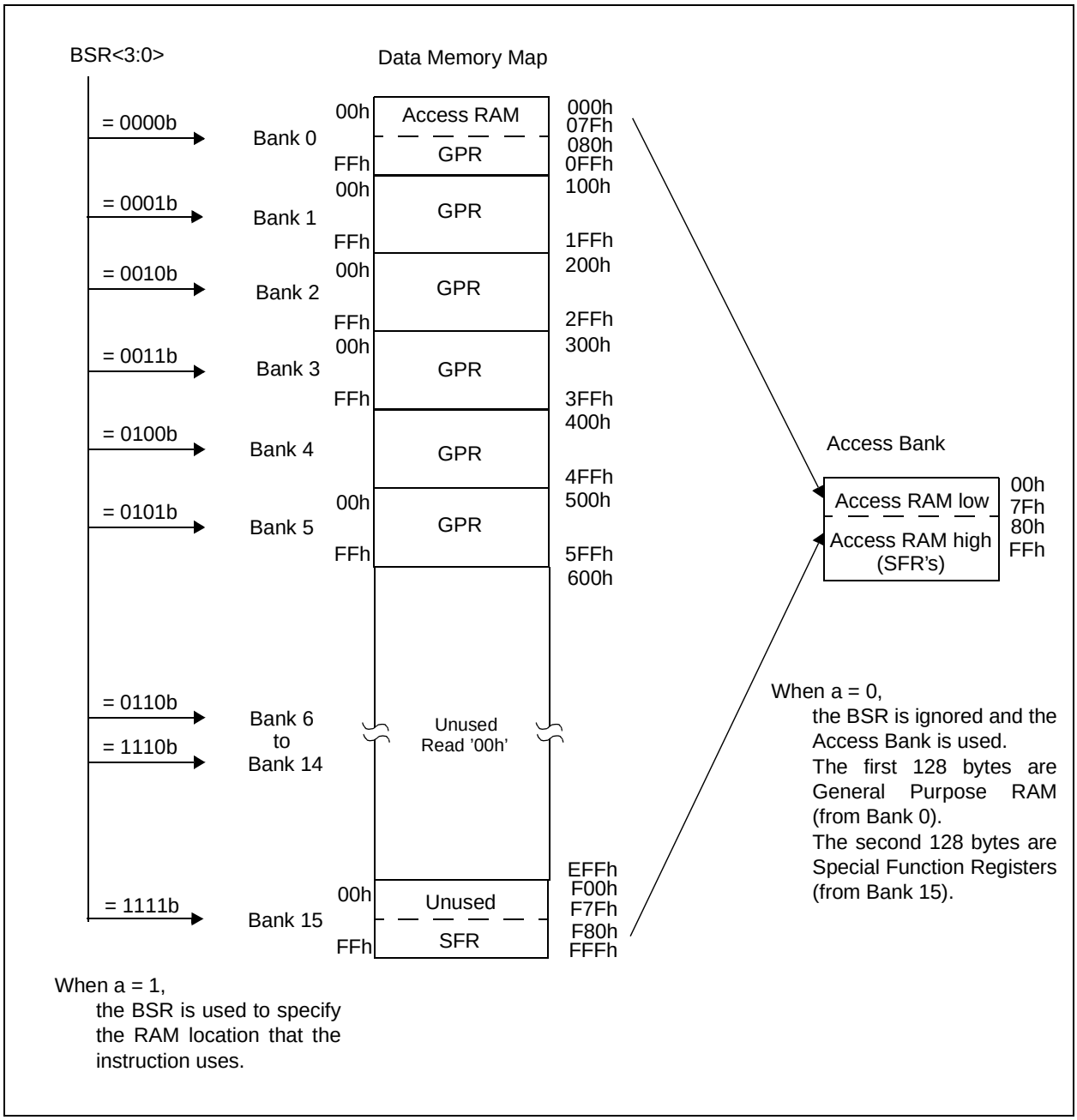

TABLE 4-1: SPECIAL FUNCTION REGISTER MAP

FFFh	TOSU	FDFh	INDF2 (3)	FBFh	CCPR1H	F9Fh	IPR1
FFEh	TOSH	FDEh	POSTINC2 (3)	FBEh	CCPR1L	F9Eh	PIR1
FFDh	TOSL	FDDh	POSTDEC2 (3)	FBDh	CCP1CON	F9Dh	PIE1
FFCh	STKPTR	FDCh	PREINC2 (3)	FBCh	CCPR2H	F9Ch	—
FFBh	PCLATU	FDBh	PLUSW2 (3)	FBBh	CCPR2L	F9Bh	—
FFAh	PCLATH	FDAh	FSR2H	FBAh	CCP2CON	F9Ah	—
FF9h	PCL	FD9h	FSR2L	FB9h	—	F99h	—
FF8h	TBLPTRU	FD8h	STATUS	FB8h	—	F98h	—
FF7h	TBLPTRH	FD7h	TMR0H	FB7h	—	F97h	—
FF6h	TBLPTRL	FD6h	TMR0L	FB6h	—	F96h	TRISE (2)
FF5h	TABLAT	FD5h	T0CON	FB5h	—	F95h	TRISD (2)
FF4h	PRODH	FD4h	—	FB4h	—	F94h	TRISC
FF3h	PRODL	FD3h	OSCCON	FB3h	TMR3H	F93h	TRISB
FF2h	INTCON	FD2h	LVDCON	FB2h	TMR3L	F92h	TRISA
FF1h	INTCON2	FD1h	WDTCON	FB1h	T3CON	F91h	—
FF0h	INTCON3	FD0h	RCON	FB0h	—	F90h	—
FEFh	INDF0 (3)	FCFh	TMR1H	FAFh	SPBRG	F8Fh	—
FEEh	POSTINC0 (3)	FCEh	TMR1L	FAEh	RCREG	F8Eh	—
FEDh	POSTDEC0 (3)	FCDh	T1CON	FADh	TXREG	F8Dh	LATE (2)
FECh	PREINC0 (3)	FCCh	TMR2	FACh	TXSTA	F8Ch	LATD (2)
FEBh	PLUSW0 (3)	FCBh	PR2	FABh	RCSTA	F8Bh	LATC
FEAh	FSR0H	FCAh	T2CON	FAAh	—	F8Ah	LATB
FE9h	FSR0L	FC9h	SSPBUF	FA9h	—	F89h	LATA
FE8h	WREG	FC8h	SSPADD	FA8h	—	F88h	—
FE7h	INDF1 (3)	FC7h	SSPSTAT	FA7h	—	F87h	—
FE6h	POSTINC1 (3)	FC6h	SSPCON1	FA6h	—	F86h	—
FE5h	POSTDEC1 (3)	FC5h	SSPCON2	FA5h	—	F85h	—
FE4h	PREINC1 (3)	FC4h	ADRESH	FA4h	—	F84h	PORTE (2)
FE3h	PLUSW1 (3)	FC3h	ADRESL	FA3h	—	F83h	PORTD (2)
FE2h	FSR1H	FC2h	ADCON0	FA2h	IPR2	F82h	PORTC
FE1h	FSR1L	FC1h	ADCON1	FA1h	PIR2	F81h	PORTB
FE0h	BSR	FC0h	—	FA0h	PIE2	F80h	PORTA

Note 1: Unimplemented registers are read as ’0’

2: This registers is not available on PIC18C2X2 devices

3: This is not a physical register

TABLE 4-2: REGISTER FILE SUMMARY

Filename	Bit 7	Bit 6	Bit 5	Bit 4	Bit 3	Bit 2	Bit 1	Bit 0	Value on POR, BOR	Value on all other resets (note 3)
TOSU	—	—	—	Top-of-Stack upper Byte (TOS<20:16>)					---0 0000	---0 0000
TOSH	Top-of-Stack High Byte (TOS<15:8>)								0000 0000	0000 0000
TOSL	Top-of-Stack Low Byte (TOS<7:0>)								0000 0000	0000 0000
STKPTR	STKFUL	STKUNF	—	Return Stack Pointer					00-0 0000	00-0 0000
PCLATU	—	—	—	Holding Register for PC<20:16>					---0 0000	---0 0000
PCLATH	Holding Register for PC<15:8>								0000 0000	0000 0000
PCL	PC Low Byte (PC<7:0>)								0000 0000	0000 0000
TBLPTRU	—	—	bit21(2)	Program Memory Table Pointer Upper Byte (TBLPTR<20:16>)					---0 0000	---0 0000
TBLPTRH	Program Memory Table Pointer High Byte (TBLPTR<15:8>)								0000 0000	0000 0000
TBLPTRL	Program Memory Table Pointer Low Byte (TBLPTR<7:0>)								0000 0000	0000 0000
TABLAT	Program Memory Table Latch								0000 0000	0000 0000
PRODH	Product Register High Byte								xxxx xxxx	uuuu uuuu
PRODL	Product Register Low Byte								xxxx xxxx	uuuu uuuu
INTCON	GIE/GIEH	PEIE/GIEL	TMR0IE	INT0IE	RBIE	TMR0IF	INT0IF	RBIF	0000 000x	0000 000u
INTCON2	RBPU	INTEDG0	INTEDG1	INTEDG2	—	TMR0IP	—	RBIP	1111 -1-1	1111 -1-1
INTCON3	INT2IP	INT1IP	—	INT2IE	INT1IE	—	INT2IF	INT1IF	11-0 0-00	11-0 0-00
INDF0	Uses contents of FSR0 to address data memory - value of FSR0 not changed (not a physical register)								n/a	n/a
POSTINC0	Uses contents of FSR0 to address data memory - value of FSR0 post-incremented (not a physical register)								n/a	n/a
POSTDEC0	Uses contents of FSR0 to address data memory - value of FSR0 post-decremented (not a physical register)								n/a	n/a
PREINC0	Uses contents of FSR0 to address data memory - value of FSR0 pre-incremented (not a physical register)								n/a	n/a
PLUSW0	Uses contents of FSR0 to address data memory - value of FSR0 pre-incremented (not a physical register) - value of FSR0 offset by value in WREG								n/a	n/a
FSR0H	—	—	—	—	Indirect Data Memory Address Pointer 0 High Byte				---- 0000	---- 0000
FSR0L	Indirect Data Memory Address Pointer 0 Low Byte								xxxx xxxx	uuuu uuuu
WREG	Working Register								xxxx xxxx	uuuu uuuu
INDF1	Uses contents of FSR1 to address data memory - value of FSR1 not changed (not a physical register)								n/a	n/a
POSTINC1	Uses contents of FSR1 to address data memory - value of FSR1 post-incremented (not a physical register)								n/a	n/a
POSTDEC1	Uses contents of FSR1 to address data memory - value of FSR1 post-decremented (not a physical register)								n/a	n/a
PREINC1	Uses contents of FSR1 to address data memory - value of FSR1 pre-incremented (not a physical register)								n/a	n/a
PLUSW1	Uses contents of FSR1 to address data memory - value of FSR1 pre-incremented (not a physical register) - value of FSR1 offset by value in WREG								n/a	n/a
FSR1H	—	—	—	—	Indirect Data Memory Address Pointer 1 High Byte				---- 0000	---- 0000
FSR1L	Indirect Data Memory Address Pointer 1 Low Byte								xxxx xxxx	uuuu uuuu
BSR	—	—	—	—	Bank Select Register				---- 0000	---- 0000
INDF2	Uses contents of FSR2 to address data memory - value of FSR2 not changed (not a physical register)								n/a	n/a
POSTINC2	Uses contents of FSR2 to address data memory - value of FSR2 post-incremented (not a physical register)								n/a	n/a
POSTDEC2	Uses contents of FSR2 to address data memory - value of FSR2 post-decremented (not a physical register)								n/a	n/a
PREINC2	Uses contents of FSR2 to address data memory - value of FSR2 pre-incremented (not a physical register)								n/a	n/a
PLUSW2	Uses contents of FSR2 to address data memory - value of FSR2 pre-incremented (not a physical register) - value of FSR2 offset by value in WREG								n/a	n/a
FSR2H	—	—	—	—	Indirect Data Memory Address Pointer 2 High Byte				---- 0000	---- 0000
FSR2L	Indirect Data Memory Address Pointer 2 Low Byte								xxxx xxxx	uuuu uuuu
STATUS	—	—	—	N	OV	Z	DC	C	---x xxxx	---u uuuu
TMR0H	Timer0 register high byte								0000 0000	0000 0000
TMR0L	Timer0 register low byte								xxxx xxxx	uuuu uuuu
T0CON	TMR0ON	T08BIT	T0CS	T0SE	PSA	T0PS2	T0PS1	T0PS0	1111 1111	1111 1111

Legend: x = unknown, u = unchanged, - = unimplemented, q = value depends on condition

Note 1: RA6 and associated bits are configured as port pins in RCIO and ECIO oscillator mode only and read '0' in all other oscillator modes.

2: Bit 21 of the TBLPTRU allows access to the device configuration bits.

3: Other (non-power-up) resets include external reset through $\overline{\text{MCLR}}$ and Watchdog Timer Reset.

TABLE 4-2: REGISTER FILE SUMMARY (Cont.'d)

Filename	Bit 7	Bit 6	Bit 5	Bit 4	Bit 3	Bit 2	Bit 1	Bit 0	Value on POR, BOR	Value on all other resets (note 3)
OSCCON	—	—	—	—	—	—	—	SCS	---- ---0	---- ---0
LVDCON	—	—	IRVST	LVDEN	LVDL3	LVDL2	LVDL1	LVDL0	--00 0101	--00 0101
WDTCON	—	—	—	—	—	—	—	SWDTE	---- ---0	---- ---0
RCON	IPEN	LWRT	—	$\overline{RI}$	$\overline{TO}$	$\overline{PD}$	$\overline{POR}$	$\overline{BOR}$	0q-1 11qq	0q-q qquu
TMR1H	Timer1 Register High Byte								xxxx xxxx	uuuu uuuu
TMR1L	Timer1 Register Low Byte								xxxx xxxx	uuuu uuuu
T1CON	RD16	—	T1CKPS1	T1CKPS0	T1OSCEN	T1SYNC	TMR1CS	TMR1ON	0-00 0000	u-uu uuuu
TMR2	Timer2 Register								0000 0000	0000 0000
PR2	Timer2 Period Register								1111 1111	1111 1111
T2CON	—	TOUTPS3	TOUTPS2	TOUTPS1	TOUTPS0	TMR2ON	T2CKPS1	T2CKPS0	-000 0000	-000 0000
SSPBUF	SSP Receive Buffer/Transmit Register								xxxx xxxx	uuuu uuuu
SSPADD	SSP Address Register in I^2C Slave Mode. SSP Baud Rate Reload Register in I^2C Master Mode.								0000 0000	0000 0000
SSPSTAT	SMP	CKE	D/$\overline{A}$	P	S	R/$\overline{W}$	UA	BF	0000 0000	0000 0000
SSPCON1	WCOL	SSPOV	SSPEN	CKP	SSPM3	SSPM2	SSPM1	SSPM0	0000 0000	0000 0000
SSPCON2	GCEN	ACKSTAT	ACKDT	ACKEN	RCEN	PEN	RSEN	SEN	0000 0000	0000 0000
ADRESH	A/D Result Register High Byte								xxxx xxxx	uuuu uuuu
ADRESL	A/D Result Register Low Byte								xxxx xxxx	uuuu uuuu
ADCON0	ADCS1	ADCS0	CHS2	CHS1	CHS0	GO/$\overline{DONE}$	—	ADON	0000 00-0	0000 00-0
ADCON1	ADFM	ADCS2	—	—	PCFG3	PCFG2	PCFG1	PCFG0	00-- 0000	00-- 0000
CCPR1H	Capture/Compare/PWM Register1 High Byte								xxxx xxxx	uuuu uuuu
CCPR1L	Capture/Compare/PWM Register1 Low Byte								xxxx xxxx	uuuu uuuu
CCP1CON	—	—	DC1B1	DC1B0	CCP1M3	CCP1M2	CCP1M1	CCP1M0	--00 0000	--00 0000
CCPR2H	Capture/Compare/PWM Register2 High Byte								xxxx xxxx	uuuu uuuu
CCPR2L	Capture/Compare/PWM Register2 Low Byte								xxxx xxxx	uuuu uuuu
CCP2CON	—	—	DC2B1	DC2B0	CCP2M3	CCP2M2	CCP2M1	CCP2M0	--00 0000	--00 0000
TMR3H	Timer3 Register High Byte								xxxx xxxx	uuuu uuuu
TMR3L	Timer3 Register Low Byte								xxxx xxxx	uuuu uuuu
T3CON	RD16	T3CCP2	T3CKPS1	T3CKPS0	T3CCP1	T3SYNC	TMR3CS	TMR3ON	0000 0000	uuuu uuuu
SPBRG	USART1 Baud Rate Generator								0000 0000	0000 0000
RCREG	USART1 Receive Register								0000 0000	0000 0000
TXREG	USART1 Transmit Register								0000 0000	0000 0000
TXSTA	CSRC	TX9	TXEN	SYNC	—	BRGH	TRMT	TX9D	0000 -010	0000 -010
RCSTA	SPEN	RX9	SREN	CREN	ADDEN	FERR	OERR	RX9D	0000 000x	0000 000x

Legend: x = unknown, u = unchanged, - = unimplemented, q = value depends on condition

Note 1: RA6 and associated bits are configured as port pins in RCIO and ECIO oscillator mode only and read '0' in all other oscillator modes.

2: Bit 21 of the TBLPTRU allows access to the device configuration bits.

3: Other (non-power-up) resets include external reset through $\overline{MCLR}$ and Watchdog Timer Reset.

TABLE 4-2: REGISTER FILE SUMMARY (Cont.'d)

Filename	Bit 7	Bit 6	Bit 5	Bit 4	Bit 3	Bit 2	Bit 1	Bit 0	Value on POR, BOR	Value on all other resets (note 3)
IPR2	—	—	—	—	BCLIP	LVDIP	TMR3IP	CCP2IP	---- 1111	---- 1111
PIR2	—	—	—	—	BCLIF	LVDIF	TMR3IF	CCP2IF	---- 0000	---- 0000
PIE2	—	—	—	—	BCLIE	LVDIE	TMR3IE	CCP2IE	---- 0000	---- 0000
IPR1	PSPIP	ADIP	RCIP	TXIP	SSPIP	CCP1IP	TMR2IP	TMR1IP	1111 1111	1111 1111
PIR1	PSPIF	ADIF	RCIF	TXIF	SSPIF	CCP1IF	TMR2IF	TMR1IF	0000 0000	0000 0000
PIE1	PSPIE	ADIE	RCIE	TXIE	SSPIE	CCP1IE	TMR2IE	TMR1IE	0000 0000	0000 0000
TRISE	IBF	OBF	IBOV	PSP-MODE	—	Data Direction bits for PORTE			0000 -111	0000 -111
TRISD	Data Direction Control Register for PORTD								1111 1111	1111 1111
TRISC	Data Direction Control Register for PORTC								1111 1111	1111 1111
TRISB	Data Direction Control Register for PORTB								1111 1111	1111 1111
TRISA	—	TRISA6(1)	Data Direction Control Register for PORTA						-111 1111	-111 1111
LATE	—	—	—	—	—	Read PORTE Data Latch, Write PORTE Data Latch			---- -xxx	---- -uuu
LATD	Read PORTD Data Latch, Write PORTD Data Latch								xxxx xxxx	uuuu uuuu
LATC	Read PORTC Data Latch, Write PORTC Data Latch								xxxx xxxx	uuuu uuuu
LATB	Read PORTB Data Latch, Write PORTB Data Latch								xxxx xxxx	uuuu uuuu
LATA	—	LATA6(1)	Read PORTA Data Latch, Write PORTA Data Latch(1)						-xxx xxxx	-uuu uuuu
PORTE	Read PORTE pins, Write PORTE Data Latch								---- -000	---- -000
PORTD	Read PORTD pins, Write PORTD Data Latch								xxxx xxxx	uuuu uuuu
PORTC	Read PORTC pins, Write PORTC Data Latch								xxxx xxxx	uuuu uuuu
PORTB	Read PORTB pins, Write PORTB Data Latch								xxxx xxxx	uuuu uuuu
PORTA	—	RA6(1)	Read PORTA pins, Write PORTA Data Latch(1)						-x0x 0000	-u0u 0000

Legend: x = unknown, u = unchanged, - = unimplemented, q = value depends on condition

Note 1: RA6 and associated bits are configured as port pins in RCIO and ECIO oscillator mode only and read '0' in all other oscillator modes.

2: Bit 21 of the TBLPTRU allows access to the device configuration bits.

3: Other (non-power-up) resets include external reset through $\overline{\text{MCLR}}$ and Watchdog Timer Reset.

4.10 Access Bank

The Access Bank is an architectural enhancement which is very useful for C compiler code optimization. The techniques used by the C compiler may also be useful for programs written in assembly.

This data memory region can be used for:

- Intermediate computational values
- Local variables of subroutines
- Faster context saving/switching of variables
- Common variables
- Faster evaluation/control of SFRs (no banking)

The Access Bank is comprised of the upper 128 bytes in Bank 15 (SFRs) and the lower 128 bytes in Bank 0. These two sections will be referred to as Access RAM High and Access RAM Low, respectively. Figure 4-6 and Figure 4-7 indicate the Access RAM areas.

A bit in the instruction word specifies if the operation is to occur in the bank specified by the BSR register or in the Access Bank. This bit is denoted by the 'a' bit (for access bit).

When forced in the Access Bank (a = '0'), the last address in Access RAM Low is followed by the first address in Access RAM High. Access RAM High maps the Special Function registers so that these registers can be accessed without any software overhead. This is useful for testing status flags and modifying control bits.

4.11 Bank Select Register (BSR)

The need for a large general purpose memory space dictates a RAM banking scheme. The data memory is partitioned into sixteen banks. When using direct addressing, the BSR should be configured for the desired bank.

BSR<3:0> holds the upper 4 bits of the 12-bit RAM address. The BSR<7:4> bits will always read ’0’s, and writes will have no effect.

A MOVLB instruction has been provided in the instruction set to assist in selecting banks.

If the currently selected bank is not implemented, any read will return all '0's and all writes are ignored. The STATUS register bits will be set/cleared as appropriate for the instruction performed.

Each Bank extends up to FFh (256 bytes). All data memory is implemented as static RAM.

A MOVFF instruction ignores the BSR, since the 12-bit addresses are embedded into the instruction word.

Section 4.12 provides a description of indirect addressing, which allows linear addressing of the entire RAM space.

FIGURE 4-8: DIRECT ADDRESSING

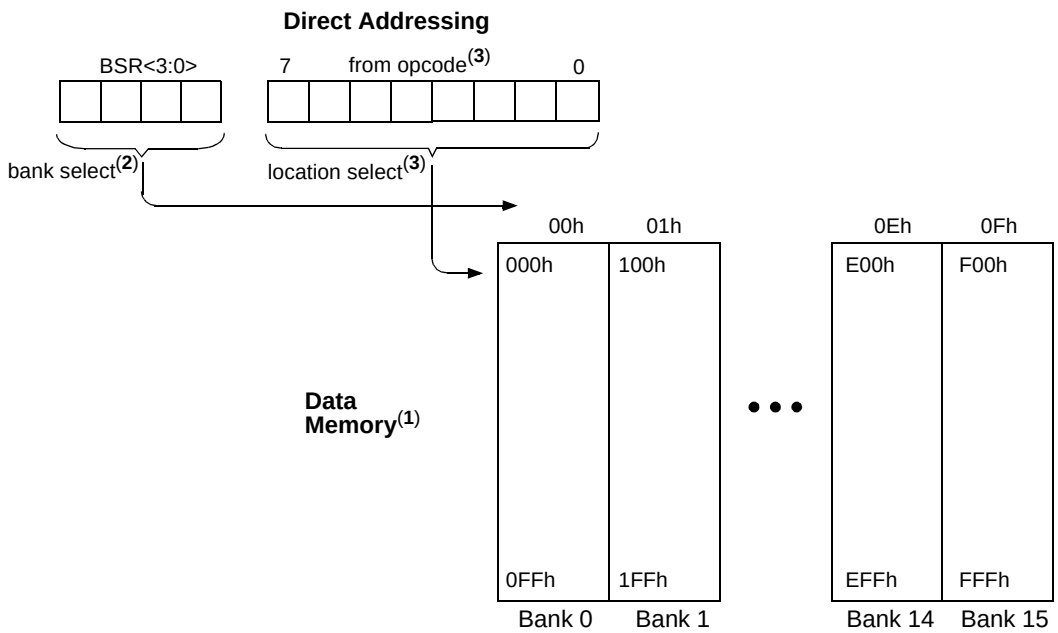

Note 1: For register file map detail, see Table 4-1.

2: The access bit of the instruction can be used to force an override of the selected bank (BSR<3:0>) to the registers of the Access Bank.

3: The MOVFF instruction embeds the entire 12-bit address in the instruction.

4.12 Indirect Addressing, INDF and FSR Registers

Indirect addressing is a mode of addressing data memory, where the data memory address in the instruction is not fixed. An SFR register is used as a pointer to the data memory location that is to be read or written. Since this pointer is in RAM, the contents can be modified by the program. This can be useful for data tables in the data memory and for software stacks. Figure 4-9 shows the operation of indirect addressing. This shows the moving of the value to the data memory address specified by the value of the FSR register.

Indirect addressing is possible by using one of the INDF registers. Any instruction using the INDF register actually accesses the register pointed to by the File Select Register, FSR. Reading the INDF register itself indirectly (FSR = '0') will read 00h. Writing to the INDF register indirectly results in a no-operation. The FSR register contains a 12-bit address, which is shown in Figure 4-10.

The INDFn register is not a physical register. Addressing INDFn actually addresses the register whose address is contained in the FSRn register (FSRn is a pointer). This is indirect addressing.

Example 4-4 shows a simple use of indirect addressing to clear the RAM in Bank1 (locations 100h-1FFh) in a minimum number of instructions.

EXAMPLE 4-4: HOW TO CLEAR RAM (BANK1) USING INDIRECT ADDRESSING

```
      LFSR  0x100, FSR0  ;
NEXT  CLRF  POSTINC0     ; Clear INDF register
                         ; & inc pointer
      BTFSS FSR0H, 1     ; All done w/ Bank1?
      GOTO  NEXT         ; NO, clear next
CONTINUE                 ;
        :                ; YES, continue
```

There are three indirect addressing registers. To address the entire data memory space (4096 bytes), these registers are 12-bit wide. To store the 12-bits of addressing information, two 8-bit registers are required. These indirect addressing registers are:

1. FSR0: composed of FSR0H:FSR0L
2. FSR1: composed of FSR1H:FSR1L
3. FSR2: composed of FSR2H:FSR2L

In addition, there are registers INDF0, INDF1 and INDF2, which are not physically implemented. Reading or writing to these registers activates indirect addressing, with the value in the corresponding FSR register being the address of the data.

If an instruction writes a value to INDF0, the value will be written to the address pointed to by FSR0H:FSR0L. A read from INDF1 reads the data from the address pointed to by FSR1H:FSR1L. INDFn can be used in code anywhere an operand can be used.

If INDF0, INDF1 or INDF2 are read indirectly via an FSR, all '0's are read (zero bit is set). Similarly, if INDF0, INDF1 or INDF2 are written to indirectly, the operation will be equivalent to a `NOP` instruction and the STATUS bits are not affected.

4.12.1 INDIRECT ADDRESSING OPERATION

Each FSR register has an INDF register associated with it, plus four additional register addresses. Performing an operation on one of these five registers determines how the FSR will be modified during indirect addressing.

When data access is done to one of the five INDFn locations, the address selected will configure the FSRn register to:

- Do nothing to FSRn after an indirect access (no change) - INDFn
- Auto-decrement FSRn after an indirect access (post-decrement) - POSTDECn
- Auto-increment FSRn after an indirect access (post-increment) - POSTINCn
- Auto-increment FSRn before an indirect access (pre-increment) - PREINCn
- Use the value in the WREG register as an offset to FSRn. Do not modify the value of the WREG or the FSRn register after an indirect access (no change) - PLUSWn

When using the auto-increment or auto-decrement features, the effect on the FSR is not reflected in the STATUS register. For example, if the indirect address causes the FSR to equal '0', the Z bit will not be set.

Incrementing or decrementing an FSR affects all 12 bits. That is, when FSRnL overflows from an increment, FSRnH will be incremented automatically.

Adding these features allows the FSRn to be used as a stack pointer in addition to its uses for table operations in data memory.

Each FSR has an address associated with it that performs an indexed indirect access. When a data access to this INDFn location (PLUSWn) occurs, the FSRn is configured to add the signed value in the WREG register and the value in FSR to form the address before an indirect access. The FSR value is not changed.

If an FSR register contains a value that points to one of the INDFn, an indirect read will read 00h (zero bit is set), while an indirect write will be equivalent to a `NOP` (STATUS bits are not affected).

If an indirect addressing operation is done where the target address is an FSRnH or FSRnL register, the write operation will dominate over the pre- or post-increment/decrement functions.

FIGURE 4-9: INDIRECT ADDRESSING OPERATION

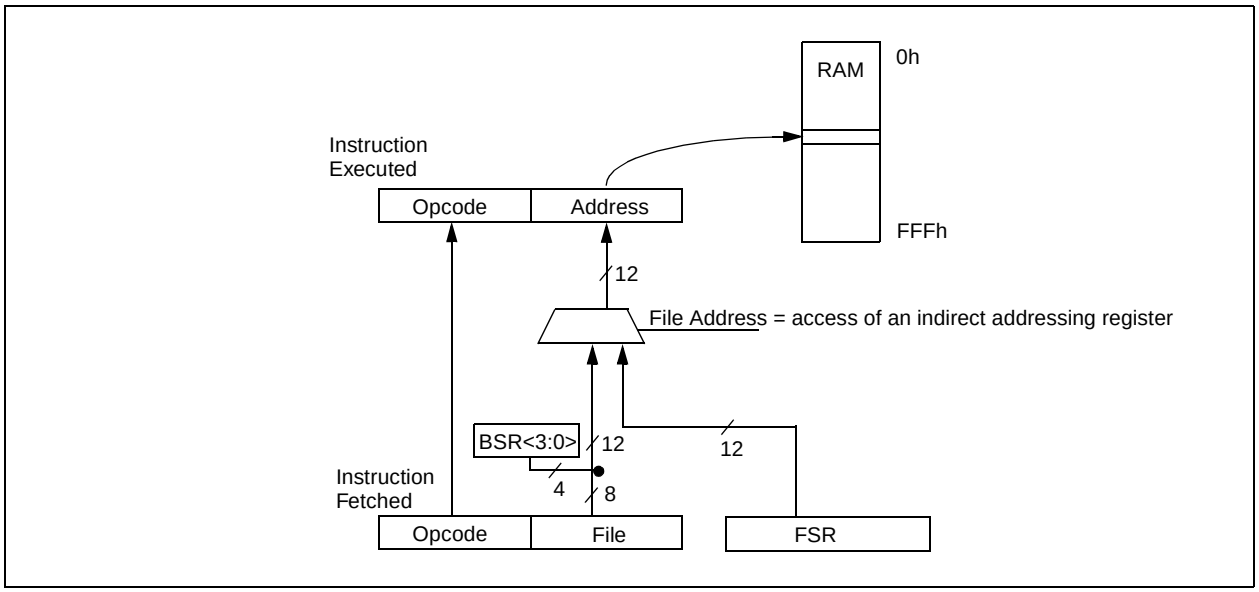

FIGURE 4-10: INDIRECT ADDRESSING

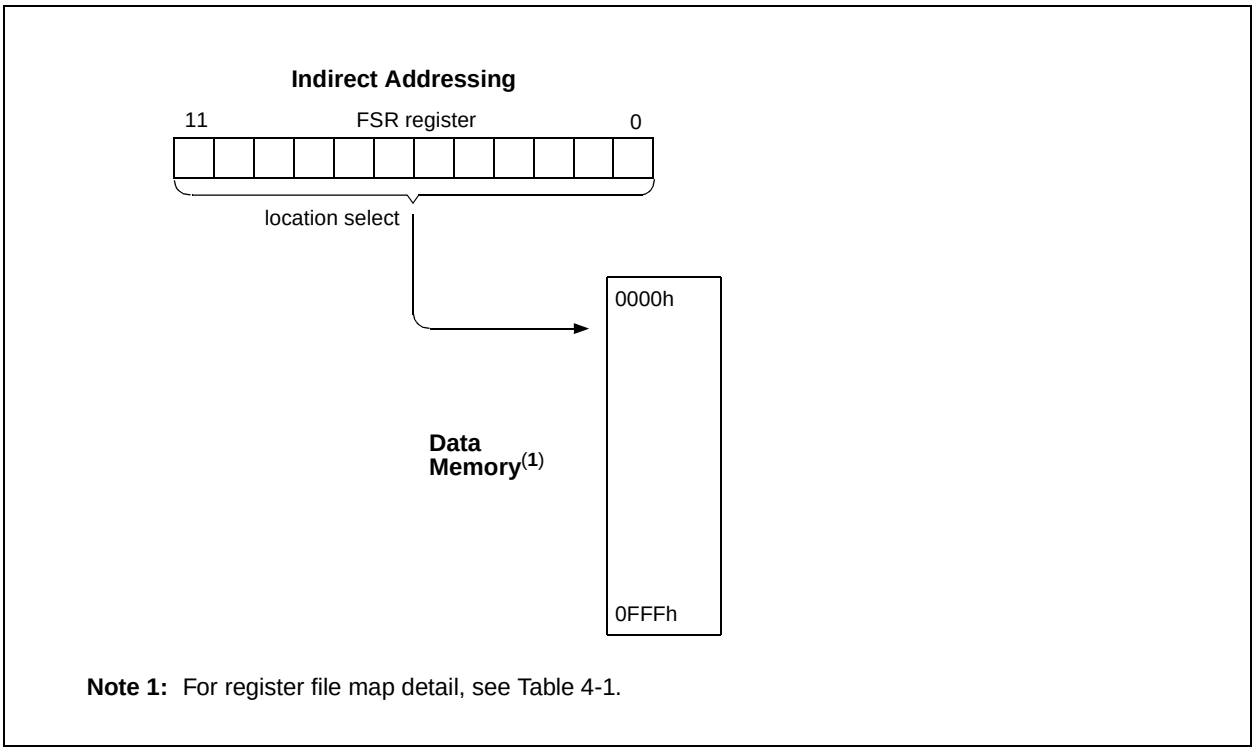

Note 1: For register file map detail, see Table 4-1.

4.13 STATUS Register

The STATUS register, shown in Register 4-2, contains the arithmetic status of the ALU. The STATUS register can be the destination for any instruction, as with any other register. If the STATUS register is the destination for an instruction that affects the Z, DC, C, OV or N bits, then the write to these five bits is disabled. These bits are set or cleared according to the device logic. Therefore, the result of an instruction with the STATUS register as destination may be different than intended.

For example, `CLRF STATUS` will clear the upper-three bits and set the Z bit. This leaves the STATUS register as `000u u1uu` (where u = unchanged).

It is recommended, therefore, that only `BCF, BSF, SWAPF, MOVFF` and `MOVWF` instructions are used to alter the STATUS register, because these instructions do not affect the `Z, C, DC, OV` or `N` bits from the STATUS register. For other instructions not affecting any status bits, see Table 19-2.

Note:	The C and DC bits operate as a $\overline{\text{borrow}}$ and $\overline{\text{digit borrow}}$ bit respectively, in subtraction.

Register 4-2: STATUS Register

U-0	U-0	U-0	R/W-x	R/W-x	R/W-x	R/W-x	R/W-x
—	—	—	N	OV	Z	DC	C
bit 7							bit 0

bit 7:5 **Unimplemented:** Read as ’0’

bit 4 **N:** Negative bit
This bit is used for signed arithmatic (2’s complement). It indicates whether the result was negative, (ALU MSB = 1)
`1` = Result was negative
`0` = Result was positive

bit 3 **OV:** Overflow bit
This bit is used for signed arithmetic (2’s complement). It indicates an overflow of the 7-bit magnitude, which causes the sign bit (bit7) to change state.
`1` = Overflow occurred for signed arithmatic (in this arithmetic operation)
`0` = No overflow occurred

bit2 **Z:** Zero bit
`1` = The result of an arithmetic or logic operation is zero
`0` = The result of an arithmetic or logic operation is not zero

bit 1 **DC:** Digit carry/$\overline{\text{borrow}}$ bit
For `ADDWF, ADDLW, SUBLW`, and `SUBWF` instructions
`1` = A carry-out from the 4th low order bit of the result occurred
`0` = No carry-out from the 4th low order bit of the result

Note: For $\overline{\text{borrow}}$, the polarity is reversed. A subtraction is executed by adding the two’s complement of the second operand. For rotate (RRF, RLF) instructions, this bit is loaded with either the bit 4 or bit 3 of the source register.

bit 0 **C:** Carry/$\overline{\text{borrow}}$ bit
For `ADDWF, ADDLW, SUBLW`, and `SUBWF` instructions
`1` = A carry-out from the most significant bit of the result occurred
`0` = No carry-out from the most significant bit of the result occurred

Note: For $\overline{\text{borrow}}$, the polarity is reversed. A subtraction is executed by adding the two’s complement of the second operand. For rotate (`RRF, RLF`) instructions, this bit is loaded with either the high or low order bit of the source register.

Legend:			
R = Readable bit	W = Writable bit	U = Unimplemented bit, read as ‘0’	
- n = Value at POR reset	’1’ = Bit is set	’0’ = Bit is cleared	x = Bit is unknown

4.13.1 RCON REGISTER

The Reset Control (RCON) register contains flag bits, that allow differentiation between the sources of a device reset. These flags include the $\overline{TO}$, $\overline{PD}$, $\overline{POR}$, $\overline{BOR}$ and $\overline{RI}$ bits. This register is readable and writable.

> **Note 1:** If the BOREN configuration bit is set, $\overline{BOR}$ is ’1’ on Power-on Reset. If the BOREN configuration bit is clear, $\overline{BOR}$ is unknown on Power-on Reset.
> The $\overline{BOR}$ status bit is a "don't care" and is not necessarily predictable if the brown-out circuit is disabled (the BOREN configuration bit is clear). $\overline{BOR}$ must then be set by the user and checked on subsequent resets to see if it is clear, indicating a brown-out has occurred.
>
> **2:** It is recommended that the $\overline{POR}$ bit be set after a Power-on Reset has been detected, so that subsequent Power-on Resets may be detected.

Register 4-3: RCON Register

R/W-0	R/W-0	U-0	R/W-1	R/W-1	R/W-1	R/W-0	R/W-0
IPEN	LWRT	—	$\overline{RI}$	$\overline{TO}$	$\overline{PD}$	$\overline{POR}$	$\overline{BOR}$
bit 7							bit 0

bit 7 **IPEN:** Interrupt Priority Enable bit
`1` = Enable priority levels on interrupts
`0` = Disable priority levels on interrupts (16CXXX compatibility mode)

bit 6 **LWRT:** Long Write Enable bit
`1` = Enable `TBLWT` to internal program memory
Once this bit is set, it can only be cleared by a POR or $\overline{MCLR}$ reset.
`0` = Disable `TBLWT` to internal program memory; `TBLWT` only to external program memory

bit 5 **Unimplemented:** Read as ’0’

bit 4 **$\overline{RI}$:** Reset Instruction Flag bit
`1` = The Reset instruction was not executed
`0` = The Reset instruction was executed causing a device reset
(must be set in software after a Brown-out Reset occurs)

bit 3 **$\overline{TO}$:** Watchdog Time-out Flag bit
`1` = After power-up, `CLRWDT` instruction, or `SLEEP` instruction
`0` = A WDT time-out occurred

bit 2 **$\overline{PD}$:** Power-down Detection Flag bit
`1` = After power-up or by the `CLRWDT` instruction
`0` = By execution of the `SLEEP` instruction

bit 1 **$\overline{POR}$:** Power-on Reset Status bit
`1` = A Power-on Reset has not occurred
`0` = A Power-on Reset occurred
(must be set in software after a Power-on Reset occurs)

bit 0 **$\overline{BOR}$:** Brown-out Reset Status bit
`1` = A Brown-out Reset has not occurred
`0` = A Brown-out Reset occurred
(must be set in software after a Brown-out Reset occurs)

Legend:			
R = Readable bit	W = Writable bit	U = Unimplemented bit, read as ‘0’	
- n = Value at POR reset	’1’ = Bit is set	’0’ = Bit is cleared	x = Bit is unknown

NOTES:

5.0 TABLE READS/TABLE WRITES

Enhanced devices have two memory spaces: the program memory space and the data memory space. The program memory space is 16 bits wide, while the data memory space is 8 bits wide. Table Reads and Table Writes have been provided to move data between these two memory spaces through an 8 bit register (TABLAT).

The operations that allow the processor to move data between the data and program memory spaces are:

- Table Read (`TBLRD`)
- Table Write (`TBLWT`)

Table Read operations retrieve data from program memory and place it into the Data memory space. Figure 5-1 shows the operation of a Table Read with program and data memory.

Table Write operations store data from the data memory space into program memory. Figure 5-2 shows the operation of a Table Write with program and data memory.

Table operations work with byte entities. A table block containing data is not required to be word aligned, so a table block can start and end at any byte address. If a table write is being used to write an executable program to program memory, program instructions will need to be word aligned.

FIGURE 5-1: TABLE READ OPERATION

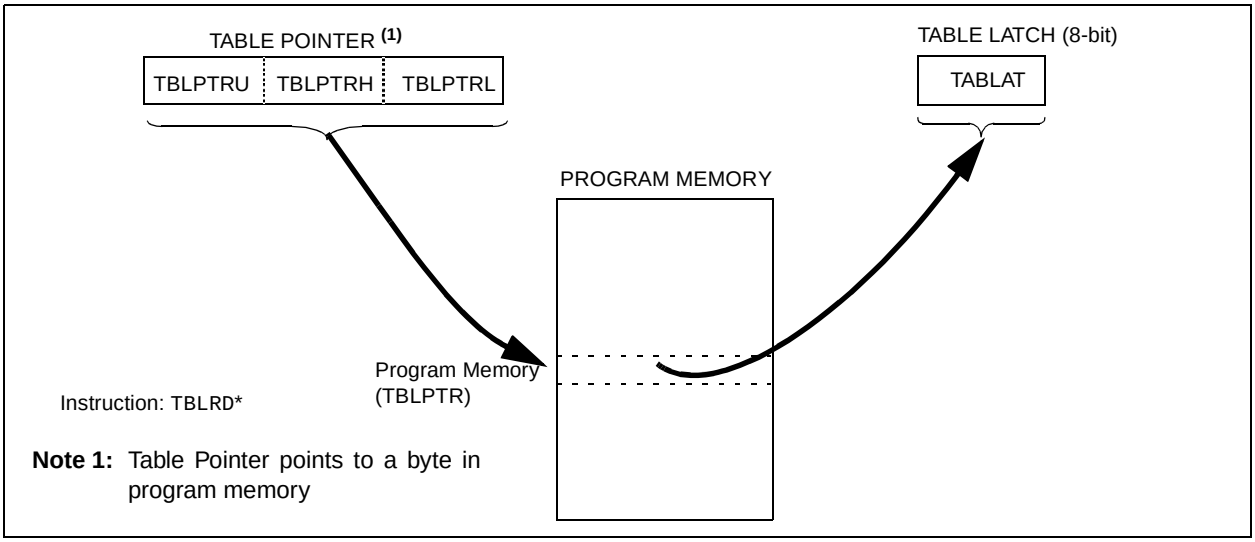

FIGURE 5-2: TABLE WRITE OPERATION

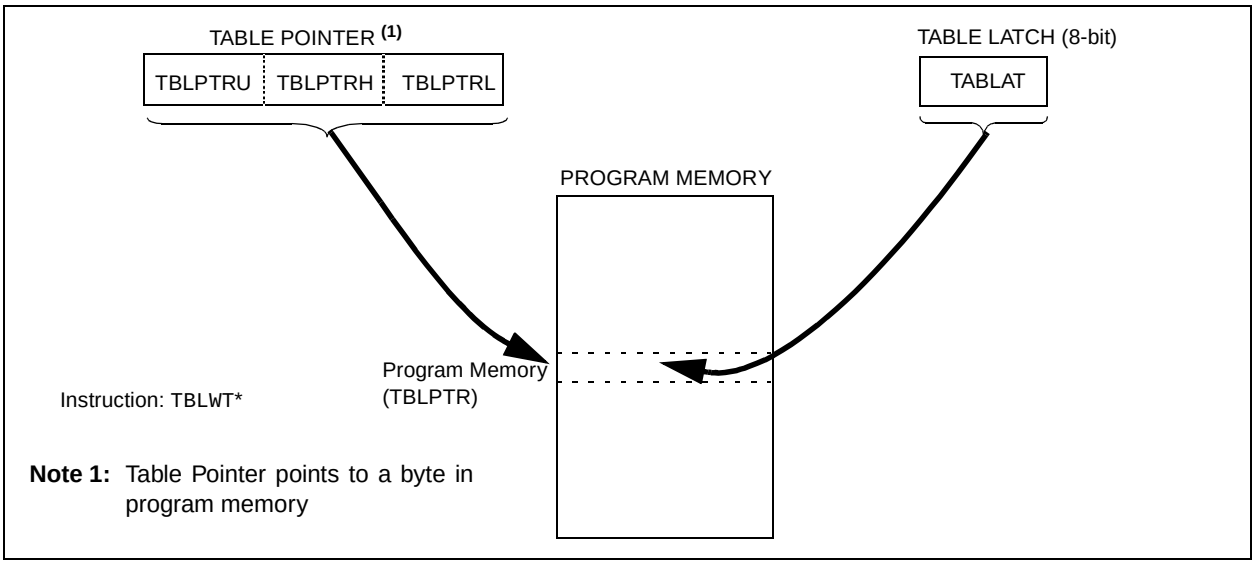

5.1 Control Registers

Several control registers are used in conjunction with the `TBLRD` and `TBLWT` instructions. These include the:

- TBLPTR registers
- TABLAT register
- RCON register

5.1.1 RCON REGISTER

The LWRT bit specifies the operation of Table Writes to internal memory when the VPP voltage is applied to the $\overline{\text{MCLR}}$ pin. When the LWRT bit is set, the controller continues to execute user code, but long table writes are allowed (for programming internal program memory) from user mode. The LWRT bit can be cleared only by performing either a POR or $\overline{\text{MCLR}}$ reset.

Register 5-1: RCON Register (Address: 08h)

R/W-0	R/W-0	U-0	R/W-1	R/W-1	R/W-1	R/W-0	R/W-0
IPEN	LWRT	—	$\overline{\text{RI}}$	$\overline{\text{TO}}$	$\overline{\text{PD}}$	$\overline{\text{POR}}$	$\overline{\text{BOR}}$
bit 7							bit 0

bit 7 **IPEN:** Interrupt Priority Enable
`1` = Enable priority levels on interrupts
`0` = Disable priority levels on interrupts (16CXXX compatibility mode)

bit 6 **LWRT:** Long Write Enable
`1` = Enable TBLWT to internal program memory
`0` = Disable TBLWT to internal program memory.

Note 1: Only cleared on a POR or $\overline{\text{MCLR}}$ reset.
This bit has no effect on `TBLWT`s to external program memory.

bit 5 **Unimplemented**: Read as ’0’

bit 4 **$\overline{\text{RI}}$:** Reset Instruction Flag bit
`1` = No Reset instruction occurred
`0` = A Reset instruction occurred

bit 3 **$\overline{\text{TO}}$:** Time-out bit
`1` = After power-up, `CLRWDT` instruction, or `SLEEP` instruction
`0` = A WDT time-out occurred

bit 2 **$\overline{\text{PD}}$:** Power-down bit
`1` = After power-up or by the `CLRWDT` instruction
`0` = By execution of the `SLEEP` instruction

bit 1 **$\overline{\text{POR}}$:** Power-on Reset Status bit
`1` = No Power-on Reset occurred
`0` = A Power-on Reset occurred (must be set in software after a Power-on Reset occurs)

bit 0 **$\overline{\text{BOR}}$:** Brown-out Reset Status bit
`1` = No Brown-out Reset nor POR reset occurred
`0` = A Brown-out Reset nor POR reset occurred
(must be set in software after a Brown-out Reset occurs)

Legend:			
R = Readable bit	W = Writable bit	U = Unimplemented bit, read as ‘0’	
- n = Value at POR reset	’1’ = Bit is set	’0’ = Bit is cleared	x = Bit is unknown

5.1.2 TABLAT - TABLE LATCH REGISTER

The Table Latch (TABLAT) is an 8-bit register mapped into the SFR space. The Table Latch is used to hold 8-bit data during data transfers between program memory and data memory.

5.1.3 TBLPTR - TABLE POINTER REGISTER

The Table Pointer (TBLPTR) addresses a byte within the program memory. The TBLPTR is comprised of three SFR registers (Table Pointer Upper byte, High byte and Low byte). These three registers (TBLPTRU:TBLPTRH:TBLPTRL) join to form a 22-bit wide pointer. The low order 21-bits allow the device to address up to 2M bytes of program memory space. The 22nd bit allows access to the Device ID, the User ID and the Configuration bits.

The table pointer TBLPTR is used by the TBLRD and TBLWT instructions. These instructions can update the TBLPTR in one of four ways based on the table operation. These operations are shown in Table 5-1. These operations on the TBLPTR only affect the low order 21-bits.

TABLE 5-1: TABLE POINTER OPERATIONS WITH TBLRD AND TBLWT INSTRUCTIONS

Example	Operation on Table Pointer
TBLRD* TBLWT*	TBLPTR is not modified
TBLRD*+ TBLWT*+	TBLPTR is incremented after the read/write
TBLRD*- TBLWT*-	TBLPTR is decremented after the read/write
TBLRD+* TBLWT+*	TBLPTR is incremented before the read/write

5.2 Internal Program Memory Read/ Writes

5.2.1 TABLE READ OVERVIEW (TBLRD)

The TBLRD instructions are used to read data from program memory to data memory.

TBLPTR points to a byte address in program space. Executing TBLRD places the byte pointed to into TABLAT. In addition, TBLPTR can be modified automatically for the next Table Read operation.

Table Reads from program memory are performed one byte at a time. The instruction will load TABLAT with the one byte from program memory pointed to by TBLPTR.

5.2.2 INTERNAL PROGRAM MEMORY WRITE BLOCK SIZE

The internal program memory of PIC18CXXX devices is written in blocks. For PIC18CXX2 devices, the write block size is 2 bytes. Consequently, Table Write operations to internal program memory are performed in pairs, one byte at a time.

When a Table Write occurs to an even program memory address (TBLPTR<0> = 0), the contents of TABLAT are transferred to an internal holding register. This is performed as a short write and the program memory block is not actually programmed at this time. The holding register is not accessible by the user.

When a Table Write occurs to an odd program memory address (TBLPTR,)>=1), a long write is started. During the long write, the contents of TABLAT are written to the high byte of the program memory block and the contents of the holding register are transferred to the low byte of the program memory block.

Figure 5-3 shows the holding register and the program memory write blocks.

If a single byte is to be programmed, the low (even) byte of the destination program word should be read using TBLRD*, modified or changed, if required, and written back to the same address using TBLWT*+. The high (odd) byte should be read using TBLRD*, modified or changed if required, and written back to the same address using TBLWT. The write to an odd address will cause a long write to begin. This process ensures that existing data in either byte will not be changed unless desired.

FIGURE 5-3: HOLDING REGISTER AND THE WRITE BLOCK

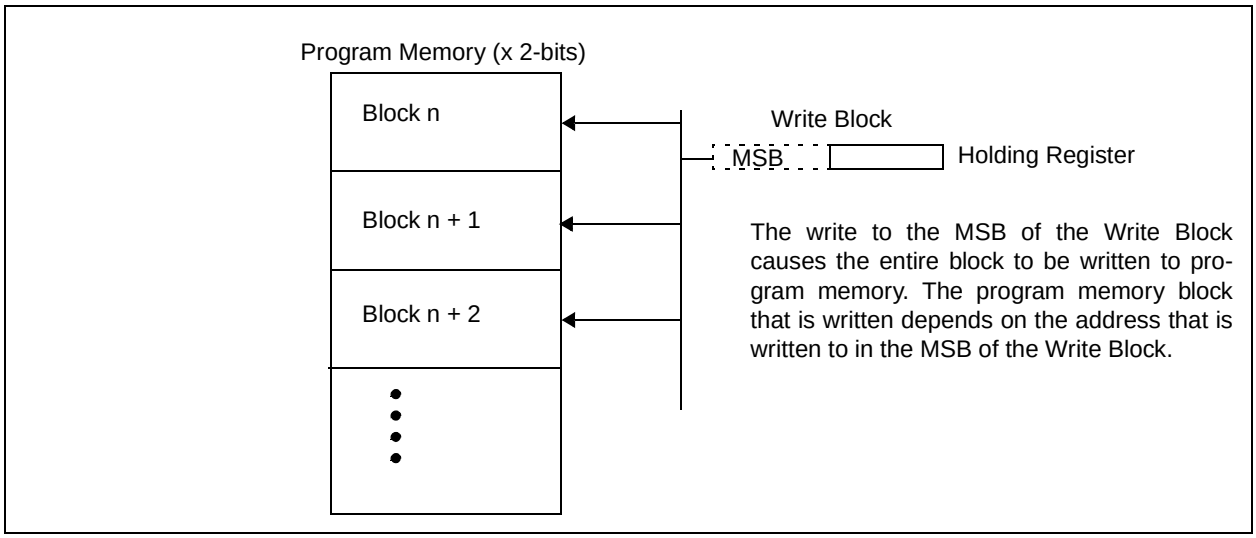

5.2.2.1 OPERATION

The long write is what actually programs words of data into the internal memory. When a TBLWT to the MSB of the write block occurs, instruction execution is halted. During this time, programming voltage and the data stored in internal latches is applied to program memory.

For a long write to occur:

1. $\overline{\text{MCLR}}$/VPP pin must be at the programming voltage
2. LWRT bit must be set
3. TBLWT to the address of the MSB of the write block

If the LWRT bit is clear, a short write will occur and program memory will not be changed. If the TBLWT is not to the MSB of the write block, then the programming phase is not initiated.

Setting the LWRT bit enables long writes when the $\overline{\text{MCLR}}$ pin is taken to VPP voltage. Once the LWRT bit is set, it can be cleared only by performing a POR or $\overline{\text{MCLR}}$ reset.

To ensure that the memory location has been well programmed, a minimum programming time is required. The long write can be terminated after the programming time has expired by a reset or an interrupt. Having only one interrupt source enabled to terminate the long write ensures that no unintended interrupts will prematurely terminate the long write.

5.2.2.2 SEQUENCE OF EVENTS

The sequence of events for programming an internal program memory location should be:

1. Enable the interrupt that terminates the long write. Disable all other interrupts.
2. Clear the source interrupt flag.
3. If Interrupt Service Routine execution is desired when the device wakes, enable global interrupts.
4. Set LWRT bit in the RCON register.
5. Raise $\overline{\text{MCLR}}$/VPP pin to the programming voltage, VPP.
6. Clear the WDT (if enabled).
7. Set the interrupt source to interrupt at the required time.
8. Execute the table write for the lower (even) byte. This will be a short write.
9. Execute the table write for the upper (odd) byte. This will be a long write. The controller will go to sleep while programming. The interrupt wakes the controller.
10. If GIE was set, service the interrupt request.
11. Lower $\overline{\text{MCLR}}$/VPP pin to VDD.
12. Verify the memory location (table read).

5.2.3 INTERRUPTS

The long write must be terminated by a reset or any interrupt.

The interrupt source must have its interrupt enable bit set. When the source sets its interrupt flag, programming will terminate. This will occur regardless of the settings of interrupt priority bits, the GIE/GIEH bit or the PIE/GIEL bit.

Depending on the states of interrupt priority bits, the GIE/GIEH bit or the PIE/GIEL bit, program execution can either be vectored to the high or low priority Interrupt Service Routine (ISR) or continue execution from where programming commenced.

In either case, the interrupt flag will not be cleared when programming is terminated and will need to be cleared by the software.

TABLE 5-2: SLEEP MODE, INTERRUPT ENABLE BITS AND INTERRUPT RESULTS

GIE/ GIEH	PIE/ GIEL	Priority	Interrupt Enable	Interrupt Flag	Action
X	X	X	0 (default)	X	Long write continues even if interrupt flag becomes set during sleep.
X	X	X	1	0	Long write continues, will wake when the interrupt flag is set.
0 (default)	0 (default)	X	1	1	Terminates long write, executes next instruction. Interrupt flag not cleared.
0 (default)	1	1 high priority (default)	1	1	Terminates long write, executes next instruction. Interrupt flag not cleared.
1	0 (default)	0 low	1	1	Terminates long write, executes next instruction. Interrupt flag not cleared.
0 (default)	1	0 low	1	1	Terminates long write, branches to low priority interrupt vector. Interrupt flag can be cleared by ISR.
1	0 (default)	1 high priority (default)	1	1	Terminates long write, branches to high priority interrupt vector. Interrupt flag can be cleared by ISR.

5.2.4 UNEXPECTED TERMINATION OF WRITE OPERATIONS

If a write is terminated by an unplanned event such as loss of power, an unexpected reset, or an interrupt that was not disabled, the memory location just programmed should be verified and reprogrammed if needed.

NOTES:

6.0 8 X 8 HARDWARE MULTIPLIER

6.1 Introduction

An 8 x 8 hardware multiplier is included in the ALU of the PIC18CXX2 devices. By making the multiply a hardware operation, it completes in a single instruction cycle. This is an unsigned multiply that gives a 16-bit result. The result is stored into the 16-bit product register pair (PRODH:PRODL). The multiplier does not affect any flags in the ALUSTA register.

Making the 8 x 8 multiplier execute in a single cycle gives the following advantages:

- Higher computational throughput
- Reduces code size requirements for multiply algorithms

The performance increase allows the device to be used in applications previously reserved for Digital Signal Processors.

Table 6-1 shows a performance comparison between enhanced devices using the single cycle hardware multiply, and performing the same function without the hardware multiply.

TABLE 6-1: PERFORMANCE COMPARISON

Routine	Multiply Method	Program Memory (Words)	Cycles (Max)	Time		
				@ 40 MHz	@ 10 MHz	@ 4 MHz
8 x 8 unsigned	Without hardware multiply	13	69	6.9 µs	27.6 µs	69 µs
	Hardware multiply	1	1	100 ns	400 ns	1 µs
8 x 8 signed	Without hardware multiply	33	91	9.1 µs	36.4 µs	91 µs
	Hardware multiply	6	6	600 ns	2.4 µs	6 µs
16 x 16 unsigned	Without hardware multiply	21	242	24.2 µs	96.8 µs	242 µs
	Hardware multiply	24	24	2.4 µs	9.6 µs	24 µs
16 x 16 signed	Without hardware multiply	52	254	25.4 µs	102.6 µs	254 µs
	Hardware multiply	36	36	3.6 µs	14.4 µs	36 µs

6.2 Operation

Example 6-1 shows the sequence to do an 8 x 8 unsigned multiply. Only one instruction is required when one argument of the multiply is already loaded in the WREG register.

Example 6-2 shows the sequence to do an 8 x 8 signed multiply. To account for the sign bits of the arguments, each argument's most significant bit (MSb) is tested and the appropriate subtractions are done.

EXAMPLE 6-1: 8 x 8 UNSIGNED MULTIPLY ROUTINE

```
MOVFF    ARG1, WREG  ;
MULWF    ARG2        ; ARG1 * ARG2 ->
                     ;   PRODH:PRODL
```

EXAMPLE 6-2: 8 x 8 SIGNED MULTIPLY ROUTINE

```
MOVFF    ARG1, WREG
MULWF    ARG2        ; ARG1 * ARG2 ->
                     ; PRODH:PRODL
BTFSC    ARG2, SB    ; Test Sign Bit
SUBWF    PRODH, F    ; PRODH = PRODH
                     ;         - ARG1
MOVFF    ARG2, WREG
BTFSC    ARG1, SB    ; Test Sign Bit
SUBWF    PRODH, F    ; PRODH = PRODH
                     ;         - ARG2
```

Example 6-3 shows the sequence to do a 16 x 16 unsigned multiply. Equation 6-1 shows the algorithm that is used. The 32-bit result is stored in 4 registers RES3:RES0.

EQUATION 6-1: 16 x 16 UNSIGNED MULTIPLICATION ALGORITHM

$$
\begin{aligned}
\text{RES3:RES0} &= \text{ARG1H:ARG1L} \bullet \text{ARG2H:ARG2L} \\
&= (\text{ARG1H} \bullet \text{ARG2H} \bullet 2^{16}) + \\
&\quad (\text{ARG1H} \bullet \text{ARG2L} \bullet 2^{8}) + \\
&\quad (\text{ARG1L} \bullet \text{ARG2H} \bullet 2^{8}) + \\
&\quad (\text{ARG1L} \bullet \text{ARG2L})
\end{aligned}
$$

EXAMPLE 6-3: 16 x 16 UNSIGNED MULTIPLY ROUTINE

```
   MOVFF    ARG1L, WREG
   MULWF    ARG2L       ; ARG1L * ARG2L ->
                        ;   PRODH:PRODL
   MOVFF    PRODH, RES1 ;
   MOVFF    PRODL, RES0 ;
;
   MOVFF    ARG1H, WREG
   MULWF    ARG2H       ; ARG1H * ARG2H ->
                        ;   PRODH:PRODL
   MOVFF    PRODH, RES3 ;
   MOVFF    PRODL, RES2 ;
;
   MOVFF    ARG1L, WREG
   MULWF    ARG2H       ; ARG1L * ARG2H ->
                        ;   PRODH:PRODL
   MOVFF    PRODL, WREG ;
   ADDWF    RES1, F     ; Add cross
   MOVFF    PRODH, WREG ;    products
   ADDWFC   RES2, F     ;
   CLRF     WREG, F     ;
   ADDWFC   RES3, F     ;
;
   MOVFF    ARG1H, WREG ;
   MULWF    ARG2L       ; ARG1H * ARG2L ->
                        ;   PRODH:PRODL
   MOVFF    PRODL, WREG ;
   ADDWF    RES1, F     ; Add cross
   MOVFF    PRODH, WREG ;    products
   ADDWFC   RES2, F     ;
   CLRF     WREG, F     ;
   ADDWFC   RES3, F     ;
```

Example 6-4 shows the sequence to do an 16 x 16 signed multiply. Equation 6-2 shows the algorithm used. The 32-bit result is stored in four registers RES3:RES0. To account for the sign bits of the arguments, each argument pairs most significant bit (MSb) is tested and the appropriate subtractions are done.

EQUATION 6-2: 16 x 16 SIGNED MULTIPLICATION ALGORITHM

$$
\begin{aligned}
&\text{RES3:RES0} \\
&\quad = \text{ARG1H:ARG1L} \bullet \text{ARG2H:ARG2L} \\
&\quad = (\text{ARG1H} \bullet \text{ARG2H} \bullet 2^{16}) + \\
&\qquad (\text{ARG1H} \bullet \text{ARG2L} \bullet 2^{8}) + \\
&\qquad (\text{ARG1L} \bullet \text{ARG2H} \bullet 2^{8}) + \\
&\qquad (\text{ARG1L} \bullet \text{ARG2L}) + \\
&\qquad (-1 \bullet \text{ARG2H<7>} \bullet \text{ARG1H:ARG1L} \bullet 2^{16}) + \\
&\qquad (-1 \bullet \text{ARG1H<7>} \bullet \text{ARG2H:ARG2L} \bullet 2^{16})
\end{aligned}
$$

EXAMPLE 6-4: 16 x 16 SIGNED MULTIPLY ROUTINE

```
   MOVFF    ARG1L, WREG
   MULWF    ARG2L       ; ARG1L * ARG2L ->
                        ;   PRODH:PRODL
   MOVFF    PRODH, RES1 ;
   MOVFF    PRODL, RES0 ;
;
   MOVFF    ARG1H, WREG
   MULWF    ARG2H       ; ARG1H * ARG2H ->
                        ;   PRODH:PRODL
   MOVFF    PRODH, RES3 ;
   MOVFF    PRODL, RES2 ;
;
   MOVFF    ARG1L, WREG
   MULWF    ARG2H       ; ARG1L * ARG2H ->
                        ;   PRODH:PRODL
   MOVFF    PRODL, WREG ;
   ADDWF    RES1, F     ; Add cross
   MOVFF    PRODH, WREG ;    products
   ADDWFC   RES2, F     ;
   CLRF     WREG, F     ;
   ADDWFC   RES3, F     ;
;
   MOVFF    ARG1H, WREG ;
   MULWF    ARG2L       ; ARG1H * ARG2L ->
                        ;   PRODH:PRODL
   MOVFF    PRODL, WREG ;
   ADDWF    RES1, F     ; Add cross
   MOVFF    PRODH, WREG ;    products
   ADDWFC   RES2, F     ;
   CLRF     WREG, F     ;
   ADDWFC   RES3, F     ;
;
   BTFSS    ARG2H, 7    ; ARG2H:ARG2L neg?
   GOTO     SIGN_ARG1   ; no, check ARG1
   MOVFF    ARG1L, WREG ;
   SUBWF    RES2        ;
   MOVFF    ARG1H, WREG ;
   SUBWFB   RES3
;
SIGN_ARG1
   BTFSS    ARG1H, 7    ; ARG1H:ARG1L neg?
   GOTO     CONT_CODE   ; no, done
   MOVFF    ARG2L, WREG ;
   SUBWF    RES2        ;
   MOVFF    ARG2H, WREG ;
   SUBWFB   RES3
;
CONT_CODE
     :
```

NOTES:

7.0 INTERRUPTS

The PIC18CXX2 devices have multiple interrupt sources and an interrupt priority feature that allows each interrupt source to be assigned a high priority level or a low priority level. The high priority interrupt vector is at 000008h and the low priority interrupt vector is at 000018h. High priority interrupt events will override any low priority interrupts that may be in progress.

There are ten registers which are used to control interrupt operation. These registers are:

- RCON
- INTCON
- INTCON2
- INTCON3
- PIR1, PIR2
- PIE1, PIE2
- IPR1, IPR2

It is recommended that the Microchip header files supplied with MPLAB be used for the symbolic bit names in these registers. This allows the assembler/compiler to automatically take care of the placement of these bits within the specified register.

Each interrupt source has three bits to control its operation. The functions of these bits are:

- Flag bit to indicate that an interrupt event occurred
- Enable bit that allows program execution to branch to the interrupt vector address when the flag bit is set
- Priority bit to select high priority or low priority

The interrupt priority feature is enabled by setting the IPEN bit (RCON<7>). When interrupt priority is enabled, there are two bits which enable interrupts globally. Setting the GIEH bit (INTCON<7>) enables all interrupts that have the priority bit set. Setting the GIEL bit (INTCON<6>) enables all interrupts that have the priority bit cleared. When the interrupt flag, enable bit and appropriate global interrupt enable it are set, the interrupt will vector immediately to address 000008h or 000018h depending on the priority level. Individual interrupts can be disabled through their corresponding enable bits.

When the IPEN bit is cleared (default state), the interrupt priority feature is disabled and interrupts are compatible with PICmicro mid-range devices. In compatibility mode, the interrupt priority bits for each source have no effect. INTCON<6> is the PEIE bit, which enables/disables all peripheral interrupt sources. INTCON<7> is the GIE bit, which enables/disables all interrupt sources. All interrupts branch to address 000008h in compatibility mode.

When an interrupt is responded to, the Global Interrupt Enable bit is cleared to disable further interrupts. If the IPEN bit is cleared, this is the GIE bit. If interrupt priority levels are used, this will be either the GIEH or GIEL bit. High priority interrupt sources can interrupt a low priority interrupt.

The return address is pushed onto the stack and the PC is loaded with the interrupt vector address (000008h or 000018h). Once in the interrupt service routine, the source(s) of the interrupt can be determined by polling the interrupt flag bits. The interrupt flag bits must be cleared in software before re-enabling interrupts to avoid recursive interrupts.

The "return from interrupt" instruction, RETFIE, exits the interrupt routine and sets the GIE bit (GIEH or GIEL if priority levels are used), which re-enables interrupts.

For external interrupt events, such as the INT pins or the PORTB input change interrupt, the interrupt latency will be three to four instruction cycles. The exact latency is the same for one or two cycle instructions. Individual interrupt flag bits are set regardless of the status of their corresponding enable bit or the GIE bit.

FIGURE 7-1: INTERRUPT LOGIC

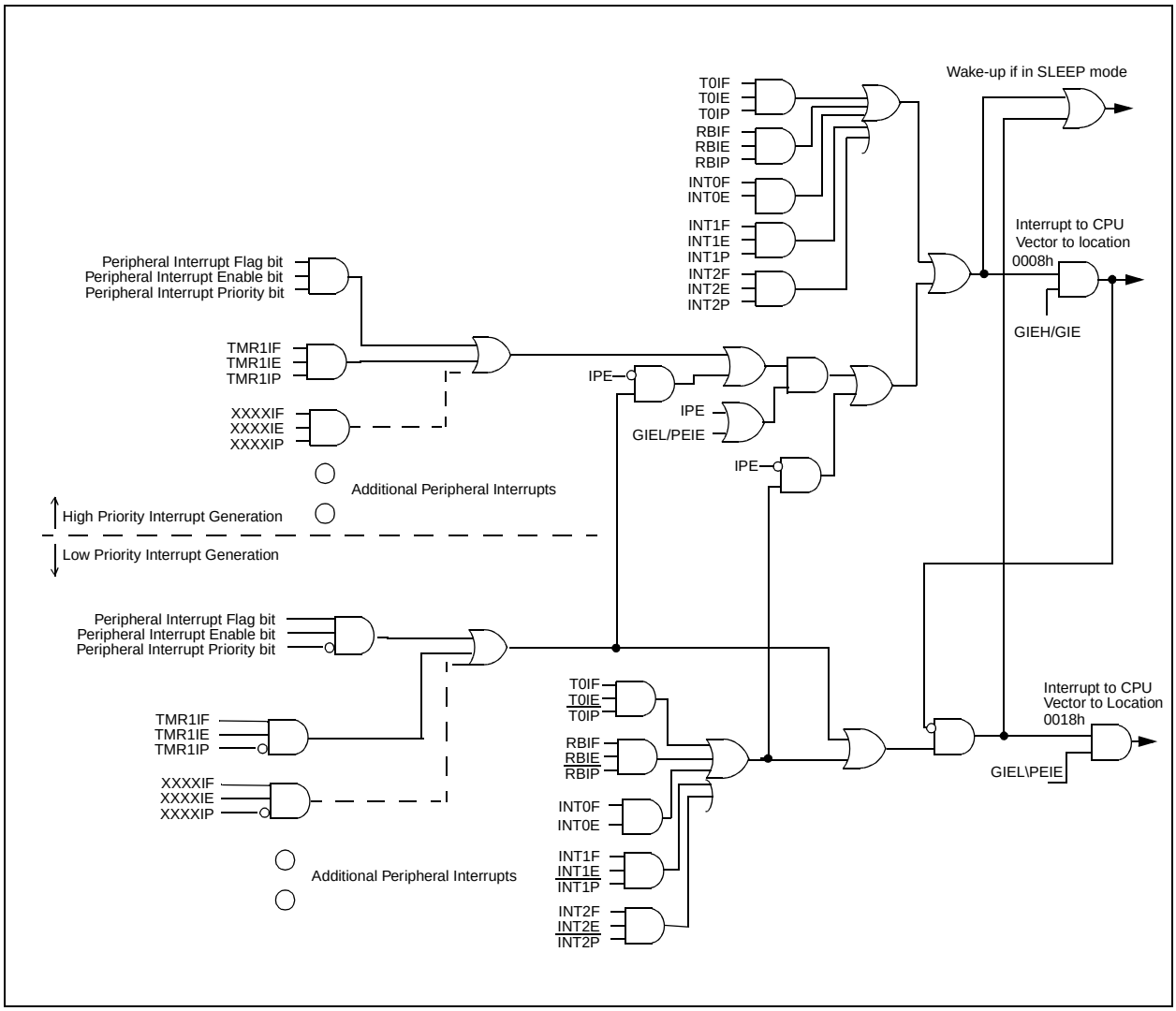

7.0.1 INTCON REGISTERS

The INTCON Registers are readable and writable registers, which contains various enable, priority and flag bits.

Register 7-1: INTCON Register

R/W-0	R/W-0	R/W-0	R/W-0	R/W-0	R/W-0	R/W-0	R/W-x
GIE/GIEH	PEIE/GIEL	TMR0IE	INT0IE	RBIE	TMR0IF	INT0IF	RBIF
bit 7							bit 0

bit 7 **GIE/GIEH:** Global Interrupt Enable bit
When IPEN = 0:

1 = Enables all un-masked interrupts
0 = Disables all interrupts

When IPEN = 1:

1 = Enables all interrupts
0 = Disables all interrupts

bit 6 **PEIE/GEIL:** Peripheral Interrupt Enable bit
When IPEN = 0:

1 = Enables all un-masked peripheral interrupts
0 = Disables all peripheral interrupts

When IPEN = 1:

1 = Enables all low priority peripheral interrupts
0 = Disables all priority peripheral interrupts

bit 5 **TMR0IE:** TMR0 Overflow Interrupt Enable bit
1 = Enables the TMR0 overflow interrupt
0 = Disables the TMR0 overflow interrupt

bit 4 **INT0IE:** INT0 External Interrupt Enable bit
1 = Enables the INT0 external interrupt
0 = Disables the INT0 external interrupt

bit 3 **RBIE:** RB Port Change Interrupt Enable bit
1 = Enables the RB port change interrupt
0 = Disables the RB port change interrupt

bit 2 **TMR0IF:** TMR0 Overflow Interrupt Flag bit
1 = TMR0 register has overflowed (must be cleared in software)
0 = TMR0 register did not overflow

bit 1 **INT0IF:** INT0 External Interrupt Flag bit
1 = The INT0 external interrupt occurred (must be cleared in software)
0 = The INT0 external interrupt did not occur

bit 0 **RBIF:** RB Port Change Interrupt Flag bit
1 = At least one of the RB7:RB4 pins changed state (must be cleared in software)
0 = None of the RB7:RB4 pins have changed state

Legend:			
R = Readable bit	W = Writable bit	U = Unimplemented bit, read as ‘0’	
- n = Value at POR reset	’1’ = Bit is set	’0’ = Bit is cleared	x = Bit is unknown

Note: Interrupt flag bits get set when an interrupt condition occurs, regardless of the state of its corresponding enable bit or the global enable bit. User software should ensure the appropriate interrupt flag bits are clear prior to enabling an interrupt. This feature allows for software polling.

Register 7-2: INTCON2 Register

R/W-1	R/W-1	R/W-1	R/W-1	U-0	R/W-1	U-0	R/W-1
$\overline{\text{RBPU}}$	INTEDG0	INTEDG1	INTEDG2	—	TMR0IP	—	RBIP
bit 7							bit 0

bit 7 **$\overline{\text{RBPU}}$**: PORTB Pull-up Enable bit
1 = All PORTB pull-ups are disabled
0 = PORTB pull-ups are enabled by individual port latch values

bit 6 **INTEDG0**:External Interrupt0 Edge Select bit
1 = Interrupt on rising edge
0 = Interrupt on falling edge

bit 5 **INTEDG1**: External Interrupt1 Edge Select bit
1 = Interrupt on rising edge
0 = Interrupt on falling edge

bit 4 **INTEDG2**: External Interrupt2 Edge Select bit
1 = Interrupt on rising edge
0 = Interrupt on falling edge

bit 3 **Unimplemented:** Read as '0'

bit 2 **TMR0IP**: TMR0 Overflow Interrupt Priority bit
1 = High priority
0 = Low priority

bit 1 **Unimplemented:** Read as '0'

bit 0 **RBIP**: RB Port Change Interrupt Priority bit
1 = High priority
0 = Low priority

Legend:			
R = Readable bit	W = Writable bit	U = Unimplemented bit, read as ‘0’	
- n = Value at POR reset	’1’ = Bit is set	’0’ = Bit is cleared	x = Bit is unknown

Note: Interrupt flag bits get set when an interrupt condition occurs, regardless of the state of its corresponding enable bit or the global enable bit. User software should ensure the appropriate interrupt flag bits are clear prior to enabling an interrupt. This feature allows for software polling.

Register 7-3: INTCON3 Register

R/W-1	R/W-1	U-0	R/W-0	R/W-0	U-0	R/W-0	R/W-0
INT2IP	INT1IP	—	INT2IE	INT1IE	—	INT2IF	INT1IF
bit 7							bit 0

bit 7 **INT2IP:** INT2 External Interrupt Priority bit
1 =High priority
0 =Low priority

bit 6 **INT1IP:** INT1 External Interrupt Priority bit
1 =High priority
0 =Low priority

bit 5 **Unimplemented:** Read as '0'

bit 4 **INT2IE:** INT2 External Interrupt Enable bit
1 =Enables the INT2 external interrupt
0 =Disables the INT2 external interrupt

bit 3 **INT1IE:** INT1 External Interrupt Enable bit
1 =Enables the INT1 external interrupt
0 =Disables the INT1 external interrupt

bit 2 **Unimplemented:** Read as '0'

bit 1 **INT2IF:** INT2 External Interrupt Flag bit
1 =The INT2 external interrupt occurred (must be cleared in software)
0 =The INT2 external interrupt did not occur

bit 0 **INT1IF:** INT1 External Interrupt Flag bit
1 =The INT1 external interrupt occurred (must be cleared in software)
0 =The INT1 external interrupt did not occur

Legend:			
R = Readable bit	W = Writable bit	U = Unimplemented bit, read as ‘0’	
- n = Value at POR reset	’1’ = Bit is set	’0’ = Bit is cleared	x = Bit is unknown

Note: Interrupt flag bits get set when an interrupt condition occurs, regardless of the state of its corresponding enable bit or the global enable bit. User software should ensure the appropriate interrupt flag bits are clear prior to enabling an interrupt. This feature allows for software polling.

7.0.2 PIR REGISTERS

The PIR registers contain the individual flag bits for the peripheral interrupts. Due to he number of peripheral interrupt sources, there are two Peripheral Interrupt Flag Registers (PIR1, PIR2).

> **Note 1:** Interrupt flag bits get set when an interrupt condition occurs, regardless of the state of its corresponding enable bit or the global enable bit, GIE (INTCON<7>).
>
> **Note 2:** User software should ensure the appropriate interrupt flag bits are cleared prior to enabling an interrupt, and after servicing that interrupt.

7.0.3 PIE REGISTERS

The PIE registers contain the individual enable bits for the peripheral interrupts. Due to the number of peripheral interrupt sources, there are two Peripheral Interrupt Enable Registers (PIE1, PIE2). When IPEN = 0, the PEIE bit must be set to enable any of these peripheral interrupts.

7.0.4 IPR REGISTERS

The IPR registers contain the individual priority bits for the peripheral interrupts. Due to on the number of peripheral interrupt sources, there are two Peripheral Interrupt Priority Registers (IPR1, IPR2). The operation of the priority bits requires that the Interrupt Priority Enable (IPEN) bit be set.

7.0.5 RCON REGISTER

The RCON register contains the bit which is used to enable prioritized interrupts (IPEN).

Register 7-4: RCON Register

R/W-0	R/W-0	U-0	R/W-1	R/W-1	R/W-1	R/W-0	R/W-0
IPEN	LWRT	—	$\overline{\text{RI}}$	$\overline{\text{TO}}$	$\overline{\text{PD}}$	$\overline{\text{POR}}$	$\overline{\text{BOR}}$
bit 7							bit 0

bit 7 **IPEN:** Interrupt Priority Enable bit
1 = Enable priority levels on interrupts
0 = Disable priority levels on interrupts (16CXXX compatibility mode)

bit 6 **LWRT:** Long Write Enable
For details of bit operation see Register 4-1

bit 5 **Unimplemented:** Read as ’0’

bit 4 **$\overline{\text{RI}}$:** Reset Instruction Flag bit
For details of bit operation see Register 4-1

bit 3 **$\overline{\text{TO}}$:** Watchdog Time-out Flag bit
For details of bit operation see Register 4-1

bit 2 **$\overline{\text{PD}}$:** Power-down Detection Flag bit
For details of bit operation see Register 4-1

bit 1 **$\overline{\text{POR}}$:** Power-on Reset Status bit
For details of bit operation see Register 4-1

bit 0 **$\overline{\text{BOR}}$:** Brown-out Reset Status bit
For details of bit operation see Register 4-1

Legend:			
R = Readable bit	W = Writable bit	U = Unimplemented bit, read as ‘0’	
- n = Value at POR reset	’1’ = Bit is set	’0’ = Bit is cleared	x = Bit is unknown

Register 7-5: Peripheral Interrupt Request (Flag) Registers

	R/W-0	R/W-0	R-0	R-0	R/W-0	R/W-0	R/W-0	R/W-0
PIR1	PSPIF	ADIF	RCIF	TXIF	SSPIF	CCP1IF	TMR2IF	TMR1IF
	bit 7							bit 0

	U-0	U-0	U-0	U-0	R/W-0	R/W-0	R/W-0	R/W-0
PIR2	—	—	—	—	BCLIF	LVDIF	TMR3IF	CCP2IF
	bit 7							bit 0

PIR1

bit 7 **PSPIF:** Parallel Slave Port Read/Write Interrupt Flag bit
1 = A read or a write operation has taken place
(must be cleared in software)
0 = No read or write has occurred

bit 6 **ADIF**: A/D Converter Interrupt Flag bit
1 = An A/D conversion completed
(must be cleared in software)
0 = The A/D conversion is not complete

bit 5 **RCIF**: USART Receive Interrupt Flag bit
1 = The USART receive buffer, RCREG, is full
(cleared when RCREG is read)
0 = The USART receive buffer is empty

bit 4 **TXIF**: USART Transmit Interrupt Flag bit
1 = The USART transmit buffer, TXREG, is empty
(cleared when TXREG is written)
0 = The USART transmit buffer is full

bit 3 **SSPIF**: Master Synchronous Serial Port Interrupt Flag bit
1 = The transmission/reception is complete
(must be cleared in software)
0 = Waiting to transmit/receive

bit 2 **CCP1IF**: CCP1 Interrupt Flag bit
Capture Mode
1 = A TMR1 register capture occurred
(must be cleared in software)
0 = No TMR1 register capture occurred

Compare Mode
1 = A TMR1 register compare match occurred
(must be cleared in software)
0 = No TMR1 register compare match occurred

PWM Mode
Unused in this mode

bit 1 **TMR2IF:** TMR2 to PR2 Match Interrupt Flag bit
1 = TMR2 to PR2 match occurred
(must be cleared in software)
0 = No TMR2 to PR2 match occurred

bit 0 **TMR1IF:** TMR1 Overflow Interrupt Flag bit
1 = TMR1 register overflowed
(must be cleared in software)
0 = TMR1 register did not overflow

Register 7-5: Peripheral Interrupt Request (Flag) Registers (cont'd)

PIR2

bit 7-4 **Unimplemented:** Read as '0'

bit 3 **BCLIF**: Bus Collision Interrupt Flag bit
1 = A Bus Collision occurred
(must be cleared in software)
0 = No Bus Collision occurred

bit 2 **LVDIF**: Low-Voltage Detect Interrupt Flag bit
1 = A low voltage condition occurred
(must be cleared in software)
0 = The device voltage is above the Low Voltage Detect trip point

bit 1 **TMR3IF**: TMR3 Overflow Interrupt Flag bit
1 = TMR3 register overflowed
(must be cleared in software)
0 = TMR3 register did not overflow

bit 0 **CCP2IF**: CCPx Interrupt Flag bit
Capture Mode
1 = A TMR1 register capture occurred
(must be cleared in software)
0 = No TMR1 register capture occurred

Compare Mode
1 = A TMR1 register compare match occurred
(must be cleared in software)
0 = No TMR1 register compare match occurred

PWM Mode
Unused in this mode

Legend:			
R = Readable bit	W = Writable bit	U = Unimplemented bit, read as '0'	
- n = Value at POR reset	'1' = Bit is set	'0' = Bit is cleared	x = Bit is unknown

Register 7-6: Peripheral Interrupt Enable Registers

	R/W-0	R/W-0	R/W-0	R/W-0	R/W-0	R/W-0	R/W-0	R/W-0
PIE1	PSPIE	ADIE	RCIE	TXIE	SSPIE	CCP1IE	TMR2IE	TMR1IE
	bit 7							bit 0

	U-0	U-0	U-0	U-0	R/W-0	R/W-0	R/W-0	R/W-0
PIE2	—	—	—	—	BCLIE	LVDIE	TMR3IE	CCP2IE
	bit 7							bit 0

PIE1

bit 7 **PSPIE:** Parallel Slave Port Read/Write Interrupt Enable bit
1 = Enables the PSP read/write interrupt
0 = Disables the PSP read/write interrupt

bit 6 **ADIE**: A/D Converter Interrupt Enable bit
1 = Enables the A/D interrupt
0 = Disables the A/D interrupt

bit 5 **RCIE**: USART Receive Interrupt Enable bit
1 = Enables the USART receive interrupt
0 = Disables the USART receive interrupt

bit 4 **TXIE**: USART Transmit Interrupt Enable bit
1 = Enables the USART transmit interrupt
0 = Disables the USART transmit interrupt

bit 3 **SSPIE**: Master Synchronous Serial Port Interrupt Enable bit
1 = Enables the MSSP interrupt
0 = Disables the MSSP interrupt

bit 2 **CCP1IE**: CCP1 Interrupt Enable bit
1 = Enables the CCP1 interrupt
0 = Disables the CCP1 interrupt

bit 1 **TMR2IE**: TMR2 to PR2 Match Interrupt Enable bit
1 = Enables the TMR2 to PR2 match interrupt
0 = Disables the TMR2 to PR2 match interrupt

bit 0 **TMR1IE**: TMR1 Overflow Interrupt Enable bit
1 = Enables the TMR1 overflow interrupt
0 = Disables the TMR1 overflow interrupt

PIE2

bit 7-4 **Unimplemented:** Read as '0'

bit 3 **BCLIE**: Bus Collision Interrupt Enable bit
1 = Enabled
0 = Disabled

bit 2 **LVDIE**: Low-voltage Detect Interrupt Enable bit
1 = Enabled
0 = Disabled

bit 1 **TMR3IE**: TMR3 Overflow Interrupt Enable bit
1 = Enables the TMR3 overflow interrupt
0 = Disables the TMR3 overflow interrupt

bit 0 **CCP2IE**: CCP2 Interrupt Enable bit
1 = Enables the CCP2 interrupt
0 = Disables the CCP2 interrupt

Legend:			
R = Readable bit	W = Writable bit	U = Unimplemented bit, read as ‘0’	
- n = Value at POR reset	’1’ = Bit is set	’0’ = Bit is cleared	x = Bit is unknown

Register 7-7: Peripheral Interrupt Priority Registers

	R/W-1	R/W-1	R/W-1	R/W-1	R/W-1	R/W-1	R/W-1	R/W-1
IPR1	PSPIP	ADIP	RCIP	TXIP	SSPIP	CCP1IP	TMR2IP	TMR1IP
	bit 7							bit 0

	U-0	U-0	U-0	U-0	R/W-1	R/W-1	R/W-1	R/W-1
IPR2	—	—	—	—	BCLIP	LVDIP	TMR3IP	CCP2IP
	bit 7							bit 0

IPR1

bit 7 **PSPIP:** Parallel Slave Port Read/Write Interrupt Priority bit
1 = High priority
0 = Low priority

bit 6 **ADIP**: A/D Converter Interrupt Priority bit
1 = High priority
0 = Low priority

bit 5 **RCIP**: USART Receive Interrupt Priority bit
1 = High priority
0 = Low priority

bit 4 **TXIP**: USART Transmit Interrupt Priority bit
1 = High priority
0 = Low priority

bit 3 **SSPIP**: Master Synchronous Serial Port Interrupt Priority bit
1 = High priority
0 = Low priority

bit 2 **CCP1IP**: CCP1 Interrupt Priority bit
1 = High priority
0 = Low priority

bit 1 **TMR2IP**: TMR2 to PR2 Match Interrupt Priority bit
1 = High priority
0 = Low priority

bit 0 **TMR1IP**: TMR1 Overflow Interrupt Priority bit
1 = High priority
0 = Low priority

IPR2

bit 7-4 **Unimplemented:** Read as '0'

bit 3 **BCLIP**: Bus Collision Interrupt Priority bit
1 = High priority
0 = Low priority

bit 2 **LVDIP**: Low-voltage Detect Interrupt Priority bit
1 = High priority
0 = Low priority

bit 1 **TMR3IP**: TMR3 Overflow Interrupt Priority bit
1 = High priority
0 = Low priority

bit 0 **CCP2IP**: CCP2 Interrupt Priority bit
1 = High priority
0 = Low priority

Legend:			
R = Readable bit	W = Writable bit	U = Unimplemented bit, read as ‘0’	
- n = Value at POR reset	’1’ = Bit is set	’0’ = Bit is cleared	x = Bit is unknown

7.0.6 INT0 INTERRUPT

External interrupts on the RB0/INT0, RB1/INT1 and RB2/INT2 pins are edge triggered: either rising if the corresponding INTEDGx bit is set in the INTCON2 register, or falling, if the INTEDGx bit is clear. When a valid edge appears on the RBx/INTx pin, the corresponding flag bit INTxF is set. This interrupt can be disabled by clearing the corresponding enable bit INTxE. Flag bit INTxF must be cleared in software in the interrupt service routine before re-enabling the interrupt. All external interrupts (INT0, INT1 and INT2) can wake-up the processor from SLEEP, if bit INTxE was set prior to going into SLEEP. If the global interrupt enable bit GIE set, the processor will branch to the interrupt vector following wake-up.

Interrupt priority for INT1 and INT2 is determined by the value contained in the interrupt priority bits INT1IP (INTCON3<6>) and INT2IP (INTCON3<7>). There is no priority bit associated with INT0. It is always a high priority interrupt source.

7.0.7 TMR0 INTERRUPT

In 8-bit mode (which is the default), an overflow (FFh → 00h) in the TMR0 register will set flag bit TMR0IF. In 16-bit mode, an overflow (FFFFh → 0000h) in the TMR0H:TMR0L registers will set flag bit TMR0IF. The interrupt can be enabled/disabled by setting/clearing enable bit T0IE (INTCON<5>). Interrupt priority for Timer0 is determined by the value contained in the interrupt priority bit TMR0IP (INTCON2<2>). See Section 8.0 for further details on the Timer0 module.

7.0.8 PORTB INTERRUPT ON CHANGE

An input change on PORTB<7:4> sets flag bit RBIF (INTCON<0>). The interrupt can be enabled/disabled by setting/clearing enable bit RBIE (INTCON<3>). Interrupt priority for PORTB Interrupt on change is determined by the value contained in the interrupt priority bit RBIP (INTCON2<0>).

7.1 Context Saving During Interrupts

During an interrupt, the return PC value is saved on the stack. Additionally, the WREG, STATUS and BSR registers are saved on the fast return stack. If a fast return from interrupt is not used (See Section 4.3), the user may need to save the WREG, STATUS and BSR registers in software. Depending on the user's application, other registers may also need to be saved. Example 6-1 saves and restores the WREG, STATUS and BSR registers during an interrupt service routine.

EXAMPLE 7-1: SAVING STATUS, WREG AND BSR REGISTERS IN RAM

```
MOVWF   W_TEMP                  ; W_TEMP is in virtual bank
MOVFF   STATUS, STATUS_TEMP     ; STATUS_TEMP located anywhere
MOVFF   BSR, BSR_TEMP           ; BSR located anywhere
;
; USER ISR CODE
;
MOVFF   BSR_TEMP, BSR           ; Restore BSR
MOVF    W_TEMP, W               ; Restore WREG
MOVFF   STATUS_TEMP, STATUS     ; Restore STATUS
```

NOTES:

8.0 I/O PORTS

Depending on the device selected, there are either five ports or three ports available. Some pins of the I/O ports are multiplexed with an alternate function from the peripheral features on the device. In general, when a peripheral is enabled, that pin may not be used as a general purpose I/O pin.

Each port has three registers for its operation. These registers are:

- TRIS register (Data Direction register)
- PORT register (reads the levels on the pins of the device)
- LAT register (output latch)

The data latch (LAT register) is useful for read-modify-write operations on the value that the I/O pins are driving.

8.1 PORTA, TRISA and LATA Registers

PORTA is a 6-bit wide bi-directional port. The corresponding data direction register is TRISA. Setting a TRISA bit (=1) will make the corresponding PORTA pin an input, (i.e., put the corresponding output driver in a hi-impedance mode). Clearing a TRISA bit (=0) will make the corresponding PORTA pin an output, (i.e., put the contents of the output latch on the selected pin).

Note:	On a Power-on Reset, these pins are configured as inputs and read as '0'.

Reading the PORTA register reads the status of the pins, whereas writing to it will write to the port latch.

The Data Latch register (LATA) is also memory mapped. Read-modify-write operations on the LATA register reads and writes the latched output value for PORTA.

The RA4 pin is multiplexed with the Timer0 module clock input to become the RA4/T0CKI pin. The RA4/T0CKI pin is a Schmitt Trigger input and an open drain output. All other RA port pins have TTL input levels and full CMOS output drivers.

The other PORTA pins are multiplexed with analog inputs and the analog VREF+ and VREF- inputs. The operation of each pin is selected by clearing/setting the control bits in the ADCON1 register (A/D Control Register1).

Note:	On a Power-on Reset, these pins are configured as analog inputs and read as '0'.

The TRISA register controls the direction of the RA pins, even when they are being used as analog inputs. The user must ensure the bits in the TRISA register are maintained set when using them as analog inputs.

EXAMPLE 8-1: INITIALIZING PORTA

```
CLRF PORTA      ; Initialize PORTA by
                ; clearing output
                ; data latches
CLRF LATA       ; Alternate method
                ; to clear output
                ; data latches
MOVLW 0x07      ; Configure A/D
MOVWF ADCON1    ; for digital inputs
MOVLW 0xCF      ; Value used to
                ; initialize data
                ; direction
MOVWF TRISA     ; Set RA<3:0> as inputs
                ; RA<5:4> as outputs
```

FIGURE 8-1: BLOCK DIAGRAM OF RA3:RA0 AND RA5 PINS

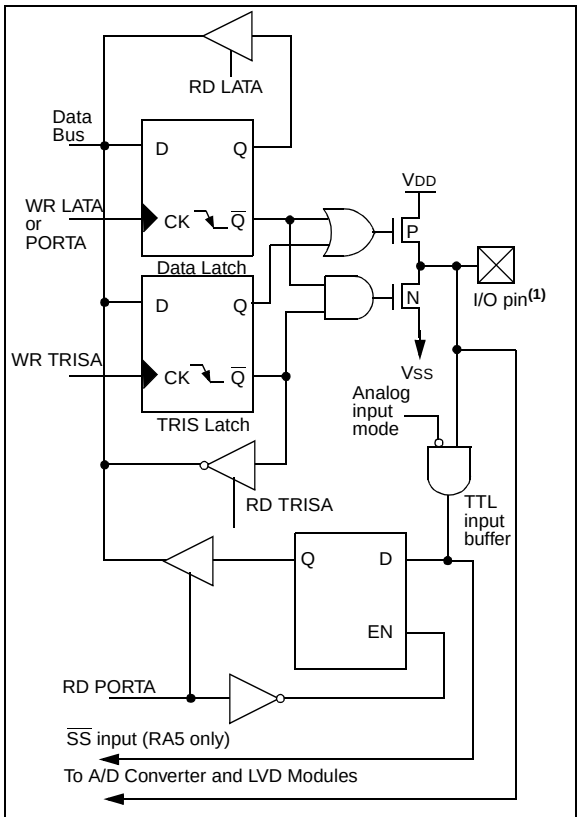

Note 1: I/O pins have protection diodes to VDD and VSS.

FIGURE 8-2: BLOCK DIAGRAM OF RA4/ T0CKI PIN

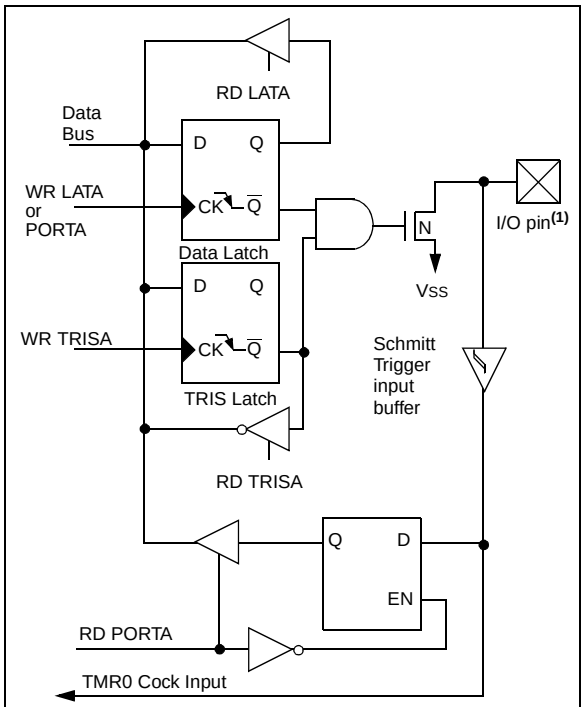

Note 1: I/O pin has protection diodes to VSS only.

FIGURE 8-3: BLOCK DIAGRAM OF RA6

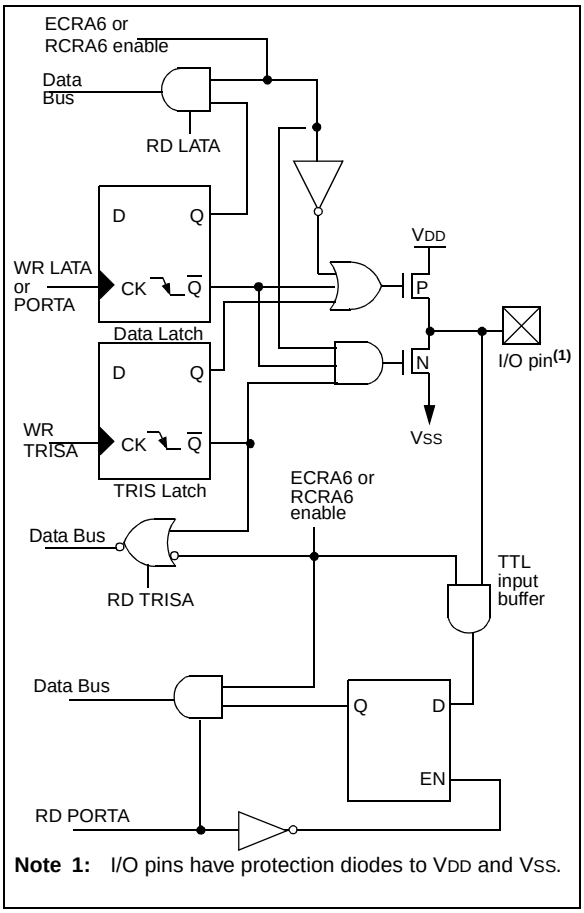

Note 1: I/O pins have protection diodes to VDD and VSS.

TABLE 8-1: PORTA FUNCTIONS

Name	Bit#	Buffer	Function
RA0/AN0	bit0	TTL	Input/output or analog input
RA1/AN1	bit1	TTL	Input/output or analog input
RA2/AN2/VREF-	bit2	TTL	Input/output or analog input or VREF-
RA3/AN3/VREF+	bit3	TTL	Input/output or analog input or VREF+
RA4/T0CKI	bit4	ST	Input/output or external clock input for Timer0 Output is open drain type
RA5/$\overline{SS}$/AN4/LVDIN	bit5	TTL	Input/output or slave select input for synchronous serial port or analog input, or low voltage detect input
OSC2/CLKO/RA6	bit6		OSC2 or clock output or I/O pin

Legend: TTL = TTL input, ST = Schmitt Trigger input

TABLE 8-2: SUMMARY OF REGISTERS ASSOCIATED WITH PORTA

Name	Bit 7	Bit 6	Bit 5	Bit 4	Bit 3	Bit 2	Bit 1	Bit 0	Value on POR, BOR	Value on all other resets
PORTA	—	RA6	RA5	RA4	RA3	RA2	RA1	RA0	`--0x 0000`	`--0u 0000`
LATA	—	Latch A Data Output Register							`--xx xxxx`	`--uu uuuu`
TRISA	—	PORTA Data Direction Register							`--11 1111`	`--11 1111`
ADCON1	ADFM	ADCS2	—	—	PCFG3	PCFG2	PCFG1	PCFG0	`--0- 0000`	`--0- 0000`

Legend: x = unknown, u = unchanged, - = unimplemented locations read as '0'. Shaded cells are not used by PORTA.

8.2 PORTB, TRISB and LATB Registers

PORTB is an 8-bit wide bi-directional port. The corresponding data direction register is TRISB. Setting a TRISB bit (=1) will make the corresponding PORTB pin an input, (i.e., put the corresponding output driver in a hi-impedance mode). Clearing a TRISB bit (=0) will make the corresponding PORTB pin an output, (i.e. put the contents of the output latch on the selected pin).

The Data Latch register (LATB) is also memory mapped. Read-modify-write operations on the LATB register reads and writes the latched output value for PORTB.

EXAMPLE 8-2: INITIALIZING PORTB

```
CLRF   PORTB    ; Initialize PORTB by
                ; clearing output
                ; data latches
CLRF   LATB     ; Alternate method
                ; to clear output
                ; data latches
MOVLW 0xCF      ; Value used to
                ; initialize data
                ; direction
MOVWF TRISB     ; Set RB<3:0> as inputs
                ; RB<5:4> as outputs
                ; RB<7:6> as inputs
```

Each of the PORTB pins has a weak internal pull-up. A single control bit can turn on all the pull-ups. This is performed by clearing bit $\overline{\text{RBPU}}$ (INTCON2<7>). The weak pull-up is automatically turned off when the port pin is configured as an output. The pull-ups are disabled on a Power-on Reset.

Four of PORTB's pins, RB7:RB4, have an interrupt on change feature. Only pins configured as inputs can cause this interrupt to occur (i.e. any RB7:RB4 pin configured as an output is excluded from the interrupt on change comparison). The input pins (of RB7:RB4) are compared with the old value latched on the last read of PORTB. The "mismatch" outputs of RB7:RB4 are OR'ed together to generate the RB Port Change Interrupt with flag bit RBIF (INTCON<0>).

This interrupt can wake the device from SLEEP. The user, in the interrupt service routine, can clear the interrupt in the following manner:

a) Any read or write of PORTB (except with the MOVFF instruction). This will end the mismatch condition.
b) Clear flag bit RBIF.

A mismatch condition will continue to set flag bit RBIF. Reading PORTB will end the mismatch condition and allow flag bit RBIF to be cleared.

The interrupt on change feature is recommended for wake-up on key depression operation and operations where PORTB is only used for the interrupt on change feature. Polling of PORTB is not recommended while using the interrupt on change feature.

FIGURE 8-4: BLOCK DIAGRAM OF RB7:RB4 PINS

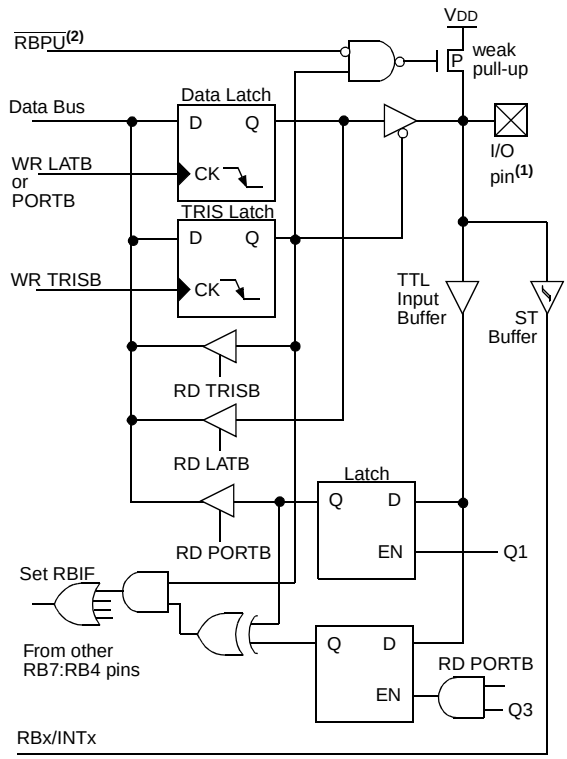

Note 1: I/O pins have diode protection to VDD and VSS.
2: To enable weak pull-ups, set the appropriate TRIS bit(s) and clear the $\overline{\text{RBPU}}$ bit (INTCON2<7>).

FIGURE 8-5: BLOCK DIAGRAM OF RB2:RB0 PINS

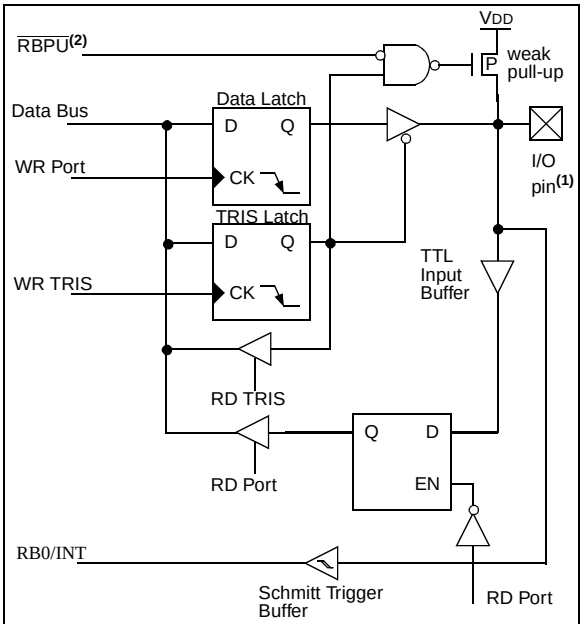

Note 1: I/O pins have diode protection to VDD and VSS.
2: To enable weak pull-ups, set the appropriate TRIS bit(s) and clear the $\overline{\text{RBPU}}$ bit (OPTION_REG<7>).

FIGURE 8-6: BLOCK DIAGRAM OF RB3

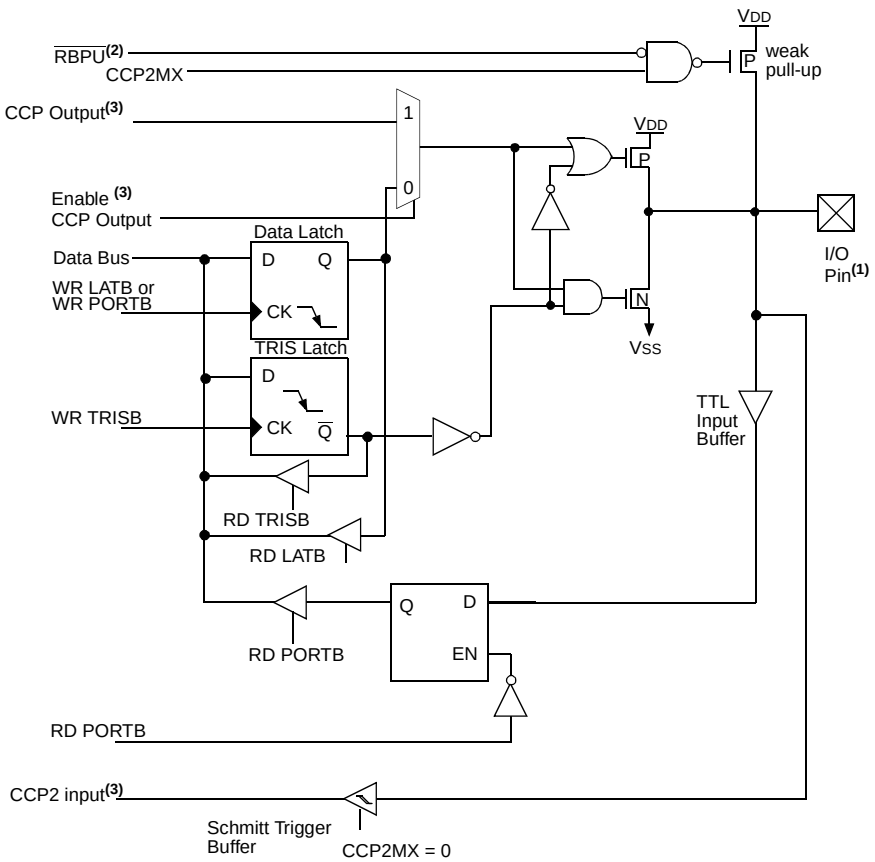

Note 1: I/O pin has diode protection to VDD and VSS.
2: To enable weak pull-ups, set the appropriate DDR bit(s) and clear the $\overline{\text{RBPU}}$ bit (INTCON2<7>).
3: The CCP2 input/output is multiplexed with RB3 if the CCP2MX bit is enabled (='0') in the configuration register.

TABLE 8-3: PORTB FUNCTIONS

Name	Bit#	Buffer	Function
RB0/INT0	bit0	TTL/ST(1)	Input/output pin or external interrupt input1. Internal software programmable weak pull-up.
RB1/INT1	bit1	TTL/ST(1)	Input/output pin or external interrupt input2. Internal software programmable weak pull-up.
RB2/INT2	bit2	TTL/ST(1)	Input/output pin or external interrupt input3. Internal software programmable weak pull-up.
RB3/CCP2 (3)	bit3	TTL/ST(4)	Input/output pin. Capture2 input/Compare2 output/PWM output when CCP2MX configuration bit is enabled. Internal software programmable weak pull-up.
RB4	bit4	TTL	Input/output pin (with interrupt on change). Internal software programmable weak pull-up.
RB5	bit5	TTL	Input/output pin (with interrupt on change). Internal software programmable weak pull-up.
RB6	bit6	TTL/ST(2)	Input/output pin (with interrupt on change). Internal software programmable weak pull-up. Serial programming clock.
RB7	bit7	TTL/ST(2)	Input/output pin (with interrupt on change). Internal software programmable weak pull-up. Serial programming data.

Legend: TTL = TTL input, ST = Schmitt Trigger input

Note 1: This buffer is a Schmitt Trigger input when configured as the external interrupt.
2: This buffer is a Schmitt Trigger input when used in serial programming mode.
3: A device configuration bit selects which I/O pin the CCP2 pin is multiplexed on.
4: This buffer is a Schmitt Trigger input when configured as the CCP2 input.

TABLE 8-4: SUMMARY OF REGISTERS ASSOCIATED WITH PORTB

Name	Bit 7	Bit 6	Bit 5	Bit 4	Bit 3	Bit 2	Bit 1	Bit 0	Value on POR, BOR	Value on all other resets
PORTB	RB7	RB6	RB5	RB4	RB3	RB2	RB1	RB0	xxxx xxxx	uuuu uuuu
LATB	LATB Data Output Register									
TRISB	PORTB Data Direction Register								1111 1111	1111 1111
INTCON	GIE/ GIEH	PEIE/ GIEL	TMR0IE	INT0IE	RBIE	TMR0IF	INT0IF	RBIF	0000 000x	0000 000u
INTCON2	RBPU	INTEDG0	INTEDG1	INTEDG2	—	TMR0IP	—	RBIP	1111 -1-1	1111 -1-1
INTCON3	INT2IP	INT1IP	—	INT2IE	INT1IE	—	INT2IF	INT1IF	11-0 0-00	11-0 0-00

Legend: x = unknown, u = unchanged. Shaded cells are not used by PORTB.

8.3 PORTC, TRISC and LATC Registers

PORTC is an 8 bit wide bi-directional port. The corresponding Data Direction Register is TRISC. Setting a TRISC bit (=1) will make the corresponding PORTC pin an input, (i.e., put the corresponding output driver in a hi-impedance mode). Clearing a TRISC bit (=0) will make the corresponding PORTC pin an output, (i.e., put the contents of the output latch on the selected pin).

The Data Latch register (LATC) is also memory mapped. Read-modify-write operations on the LATC register reads and writes the latched output value for PORTC.

PORTC is multiplexed with several peripheral functions (Table 8-5). PORTC pins have Schmitt Trigger input buffers.

When enabling peripheral functions, care should be taken in defining TRIS bits for each PORTC pin. Some peripherals override the TRIS bit to make a pin an output, while other peripherals override the TRIS bit to make a pin an input. The user should refer to the corresponding peripheral section for the correct TRIS bit settings.

The pin override value is not loaded into the TRIS register. This allows read-modify-write of the TRIS register, without concern due to peripheral overrides.

EXAMPLE 8-3: INITIALIZING PORTC

```
CLRF   PORTC    ; Initialize PORTC by
                ; clearing output
                ; data latches
CLRF   LATC     ; Alternate method
                ; to clear output
                ; data latches
MOVLW 0xCF      ; Value used to
                ; initialize data
                ; direction
MOVWF TRISC     ; Set RC<3:0> as inputs
                ; RC<5:4> as outputs
                ; RC<7:6> as inputs
```

FIGURE 8-7: PORTC BLOCK DIAGRAM (PERIPHERAL OUTPUT OVERRIDE)

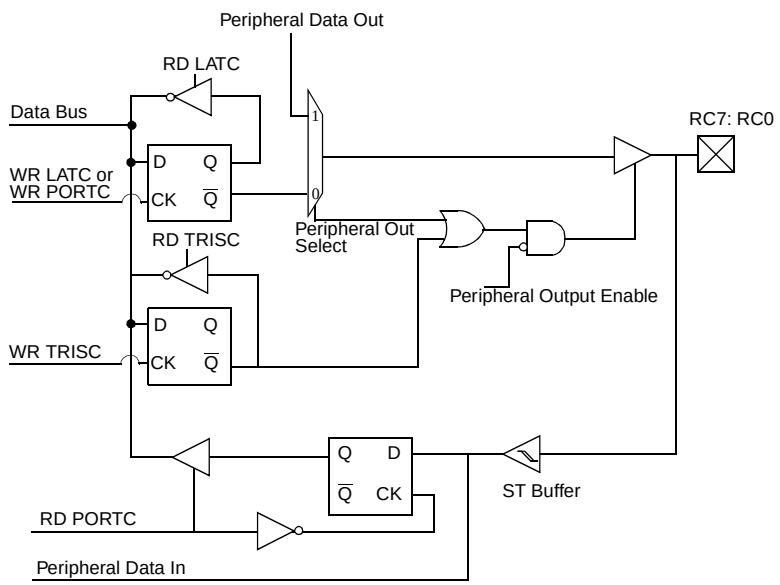

TABLE 8-5: PORTC FUNCTIONS

Name	Bit#	Buffer Type	Function
RC0/T1OSO/T1CKI	bit0	ST	Input/output port pin or Timer1 oscillator output/Timer1 clock input
RC1/T1OSI/CCP2	bit1	ST	Input/output port pin, Timer1 oscillator input, or Capture2 input/ Compare2 output/PWM output when CCP2MX configuration bit is disabled.
RC2/CCP1	bit2	ST	Input/output port pin or Capture1 input/Compare1 output/PWM1 output
RC3/SCK/SCL	bit3	ST	RC3 can also be the synchronous serial clock for both SPI and I^2C modes.
RC4/SDI/SDA	bit4	ST	RC4 can also be the SPI Data In (SPI mode) or data I/O (I^2C mode).
RC5/SDO	bit5	ST	Input/output port pin or Synchronous Serial Port data output
RC6/TX/CK	bit6	ST	Input/output port pin, Addressable USART Asynchronous Transmit, or Addressable USART Synchronous Clock
RC7/RX/DT	bit7	ST	Input/output port pin, Addressable USART Asynchronous Receive, or Addressable USART Synchronous Data

Legend: ST = Schmitt Trigger input

TABLE 8-6: SUMMARY OF REGISTERS ASSOCIATED WITH PORTC

Name	Bit 7	Bit 6	Bit 5	Bit 4	Bit 3	Bit 2	Bit 1	Bit 0	Value on POR, BOR	Value on all other resets
PORTC	RC7	RC6	RC5	RC4	RC3	RC2	RC1	RC0	xxxx xxxx	uuuu uuuu
LATC	LATC Data Output Register								xxxx xxxx	uuuu uuuu
TRISC	PORTC Data Direction Register								1111 1111	1111 1111

Legend: x = unknown, u = unchanged.

8.4 PORTD, TRISD and LATD Registers

This section is applicable to only the PIC18C4X2 devices.

PORTD is an 8 bit wide bi-directional port. The corresponding Data Direction Register is TRISD. Setting a TRISD bit (=1) will make the corresponding PORTD pin an input, (i.e., put the corresponding output driver in a hi-impedance mode). Clearing a TRISD bit (=0) will make the corresponding PORTD pin an output, (i.e., put the contents of the output latch on the selected pin).

The Data Latch Register (LATD) is also memory mapped. Read-modify-write operations on the LATD register reads and writes the latched output value for PORTD.

PORTD is an 8-bit port with Schmitt Trigger input buffers. Each pin is individually configurable as an input or output.

PORTD can be configured as an 8-bit wide microprocessor port (parallel slave port) by setting control bit PSPMODE (TRISE<4>). In this mode, the input buffers are TTL. See Section 8.6 for additional information on the Parallel Slave Port (PSP).

EXAMPLE 8-4: INITIALIZING PORTD

```
CLRF   PORTD  ; Initialize PORTD by
              ; clearing output
              ; data latches
CLRF   LATD   ; Alternate method
              ; to clear output
              ; data latches
MOVLW 0xCF    ; Value used to
              ; initialize data
              ; direction
MOVWF TRISD   ; Set RD<3:0> as inputs
              ; RD<5:4> as outputs
              ; RD<7:6> as inputs
```

FIGURE 8-8: PORTD BLOCK DIAGRAM IN I/O PORT MODE

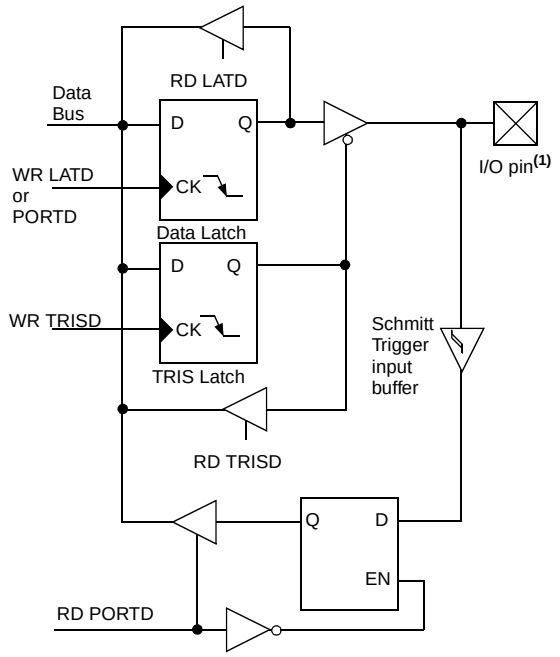

Note 1: I/O pins have protection diodes to VDD and VSS.

TABLE 8-7: PORTD FUNCTIONS

Name	Bit#	Buffer Type	Function
RD0/PSP0	bit0	ST/TTL(1)	Input/output port pin or parallel slave port bit0
RD1/PSP1	bit1	ST/TTL(1)	Input/output port pin or parallel slave port bit1
RD2/PSP2	bit2	ST/TTL(1)	Input/output port pin or parallel slave port bit2
RD3/PSP3	bit3	ST/TTL(1)	Input/output port pin or parallel slave port bit3
RD4/PSP4	bit4	ST/TTL(1)	Input/output port pin or parallel slave port bit4
RD5/PSP5	bit5	ST/TTL(1)	Input/output port pin or parallel slave port bit5
RD6/PSP6	bit6	ST/TTL(1)	Input/output port pin or parallel slave port bit6
RD7/PSP7	bit7	ST/TTL(1)	Input/output port pin or parallel slave port bit7

Legend: ST = Schmitt Trigger input, TTL = TTL input

Note 1: Input buffers are Schmitt Triggers when in I/O mode and TTL buffer when in Parallel Slave Port Mode.

TABLE 8-8: SUMMARY OF REGISTERS ASSOCIATED WITH PORTD

Name	Bit 7	Bit 6	Bit 5	Bit 4	Bit 3	Bit 2	Bit 1	Bit 0	Value on POR, BOR	Value on all other resets
PORTD	RD7	RD6	RD5	RD4	RD3	RD2	RD1	RD0	xxxx xxxx	uuuu uuuu
LATD	LATD Data Output Register								xxxx xxxx	uuuu uuuu
TRISD	PORTD Data Direction Register								1111 1111	1111 1111
TRISE	IBF	OBF	IBOV	PSPMODE	—	PORTE Data Direction Bits			0000 -111	0000 -111

Legend: x = unknown, u = unchanged, - = unimplemented read as ’0’. Shaded cells are not used by PORTD.

8.5 PORTE, TRISE and LATE Registers

This section is only applicable to the PIC18C4X2 devices.

PORTE is an 3 bit wide bi-directional port. The corresponding Data Direction Register is TRISE. Setting a TRISE bit (=1) will make the corresponding PORTE pin an input, (i.e., put the corresponding output driver in a hi-impedance mode). Clearing a TRISE bit (=0) will make the corresponding PORTE pin an output, (i.e., put the contents of the output latch on the selected pin).

The Data Latch Register (LATE) is also memory mapped. Read-modify-write operations on the LATE register reads and writes the latched output value for PORTE.

PORTE has three pins RE0/$\overline{\text{RD}}$/AN5, RE1/$\overline{\text{WR}}$/AN6 and RE2/$\overline{\text{CS}}$/AN7, which are individually configurable as inputs or outputs. These pins have Schmitt Trigger input buffers.

Figure 8-1 shows the TRISE register, which also controls the parallel slave port operation. Capture2 input/Compare2 output/PWM output when CCP2MX configuration bit is enabled.

PORTE pins are multiplexed with analog inputs. When selected as an analog input, these pins will read as ’0’s.

TRISE controls the direction of the RE pins, even when they are being used as analog inputs. The user must make sure to keep the pins configured as inputs when using them as analog inputs.

Note:	On a Power-on Reset, these pins are configured as analog inputs.

EXAMPLE 8-5: INITIALIZING PORTE

```
CLRF   PORTE   ; Initialize PORTE by
               ; clearing output
               ; data latches
CLRF   LATE    ; Alternate method
               ; to clear output
               ; data latches
MOVLW  0x07    ; Configure A/D
MOVWF  ADCON1  ; for digital inputs
MOVLW  0x03    ; Value used to
               ; initialize data
               ; direction
MOVWF  TRISC   ; Set RE<0> as inputs
               ; RE<1> as outputs
               ; RE<2> as inputs
```

FIGURE 8-9: PORTE BLOCK DIAGRAM IN I/O PORT MODE

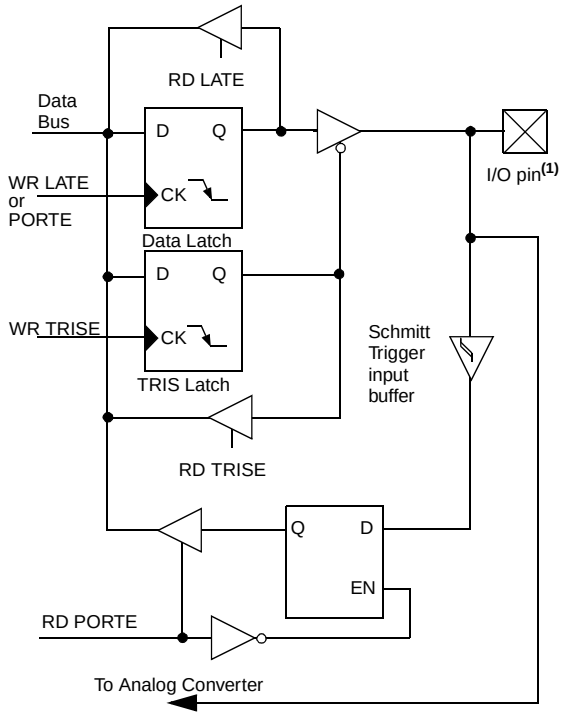

Note 1: I/O pins have protection diodes to VDD and VSS.

Register 8-1: TRISE Register

R-0	R-0	R/W-0	R/W-0	U-0	R/W-1	R/W-1	R/W-1
IBF	OBF	IBOV	PSPMODE	—	TRISE2	TRISE1	TRISE0
bit 7							bit 0

bit 7 **IBF:** Input Buffer Full Status bit

1 = A word has been received and waiting to be read by the CPU
0 = No word has been received

bit 6 **OBF**: Output Buffer Full Status bit

1 = The output buffer still holds a previously written word
0 = The output buffer has been read

bit 5 **IBOV**: Input Buffer Overflow Detect bit (in microprocessor mode)

1 = A write occurred when a previously input word has not been read (must be cleared in software)

0 = No overflow occurred

bit 4 **PSPMODE**: Parallel Slave Port Mode Select bit

1 = Parallel slave port mode
0 = General purpose I/O mode

bit 3 **Unimplemented:** Read as ’0’

bit 2 **TRISE2**: RE2 direction control bit

1 = Input
0 = Output

bit 1 **TRISE1**: RE1 direction control bit

1 = Input
0 = Output

bit 0 **TRISE0**: RE0 direction control bit

1 = Input
0 = Output

Legend:		
R = Readable bit	W = Writable bit	
U = Unimplemented bit, read as ‘0’		- n = Value at POR reset

TABLE 8-9: PORTE FUNCTIONS

Name	Bit#	Buffer Type	Function
RE0/$\overline{RD}$/AN5	bit0	ST/TTL(1)	Input/output port pin or read control input in parallel slave port mode or analog input: $\overline{RD}$ 1 = Not a read operation 0 = Read operation. Reads PORTD register (if chip selected)
RE1/$\overline{WR}$/AN6	bit1	ST/TTL(1)	Input/output port pin or write control input in parallel slave port mode or analog input: $\overline{WR}$ 1 = Not a write operation 0 = Write operation. Writes PORTD register (if chip selected)
RE2/$\overline{CS}$/AN7	bit2	ST/TTL(1)	Input/output port pin or chip select control input in parallel slave port mode or analog input: $\overline{CS}$ 1 = Device is not selected 0 = Device is selected

Legend: ST = Schmitt Trigger input, TTL = TTL input

Note 1: Input buffers are Schmitt Triggers when in I/O mode and TTL buffers when in Parallel Slave Port Mode.

TABLE 8-10: SUMMARY OF REGISTERS ASSOCIATED WITH PORTE

Name	Bit 7	Bit 6	Bit 5	Bit 4	Bit 3	Bit 2	Bit 1	Bit 0	Value on POR, BOR	Value on all other resets
PORTE	—	—	—	—	—	RE2	RE1	RE0	---- -000	---- -000
LATE	—	—	—	—	—	LATE Data Output Register			---- -xxx	---- -uuu
TRISE	IBF	OBF	IBOV	PSPMODE	—	PORTE Data Direction Bits			0000 -111	0000 -111
ADCON1	ADFM	ADCS2	—	—	PCFG3	PCFG2	PCFG1	PCFG0	--0- -000	--0- -000

Legend: x = unknown, u = unchanged, - = unimplemented read as '0'. Shaded cells are not used by PORTE.

8.6 Parallel Slave Port

The Parallel Slave Port is implemented on the 40-pin devices only (PIC18C4X2).

PORTD operates as an 8-bit wide Parallel Slave Port, or microprocessor port when control bit PSPMODE (TRISE<4>) is set. In slave mode it is asynchronously readable and writable by the external world through $\overline{RD}$ control input pin RE0/$\overline{RD}$ and $\overline{WR}$ control input pin RE1/$\overline{WR}$.

It can directly interface to an 8-bit microprocessor data bus. The external microprocessor can read or write the PORTD latch as an 8-bit latch. Setting bit PSPMODE enables port pin RE0/$\overline{RD}$ to be the $\overline{RD}$ input, RE1/$\overline{WR}$ to be the $\overline{WR}$ input and RE2/$\overline{CS}$ to be the $\overline{CS}$ (chip select) input. For this functionality, the corresponding data direction bits of the TRISE register (TRISE<2:0>) must be configured as inputs (set). The A/D port configuration bits PCFG2:PCFG0 (ADCON1<2:0>) must be set, which will configure pins RE2:RE0 as digital I/O.

A write to the PSP occurs when both the $\overline{CS}$ and $\overline{WR}$ lines are first detected low. A read from the PSP occurs when both the $\overline{CS}$ and $\overline{RD}$ lines are first detected low.

The PORTE I/O pins become control inputs for the microprocessor port when bit PSPMODE (TRISE<4>) is set. In this mode, the user must make sure that the TRISE<2:0> bits are set (pins are configured as digital inputs), and the ADCON1 is configured for digital I/O. In this mode, the input buffers are TTL.

FIGURE 8-10: PORTD AND PORTE BLOCK DIAGRAM (PARALLEL SLAVE PORT)

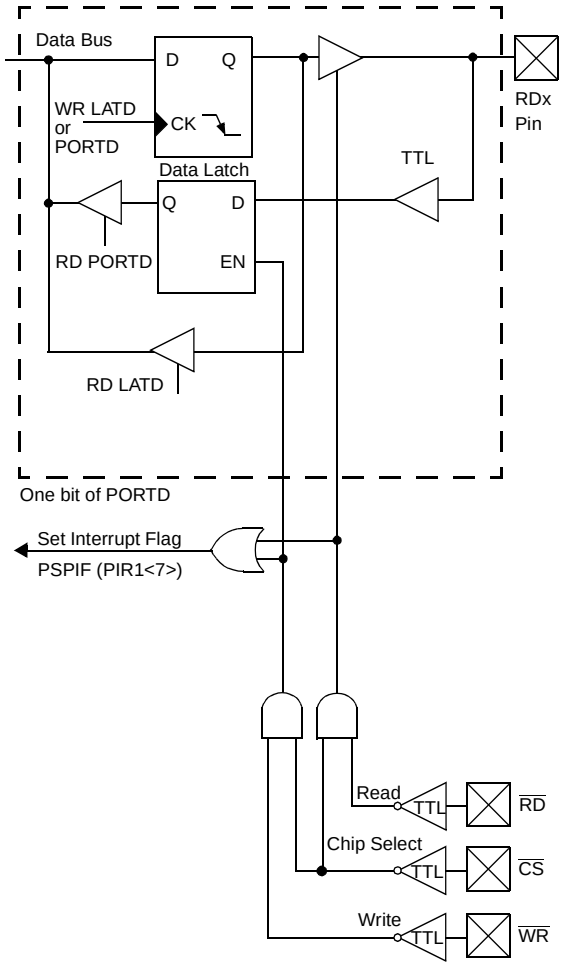

Note: I/O pin has protection diodes to VDD and VSS.

FIGURE 8-11: PARALLEL SLAVE PORT WRITE WAVEFORMS

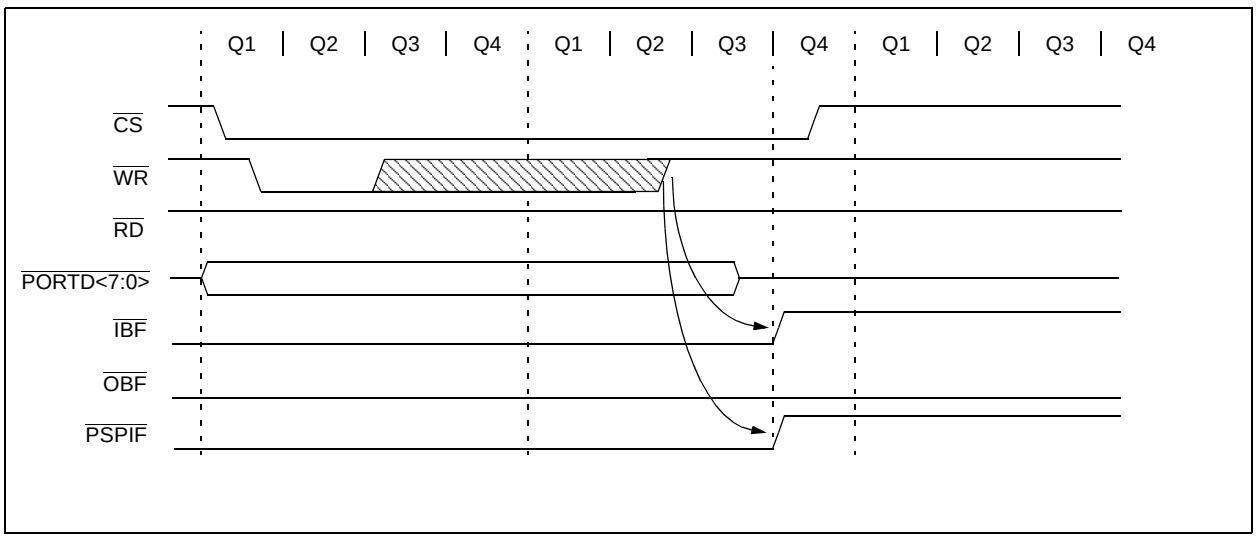

FIGURE 8-12: PARALLEL SLAVE PORT READ WAVEFORMS

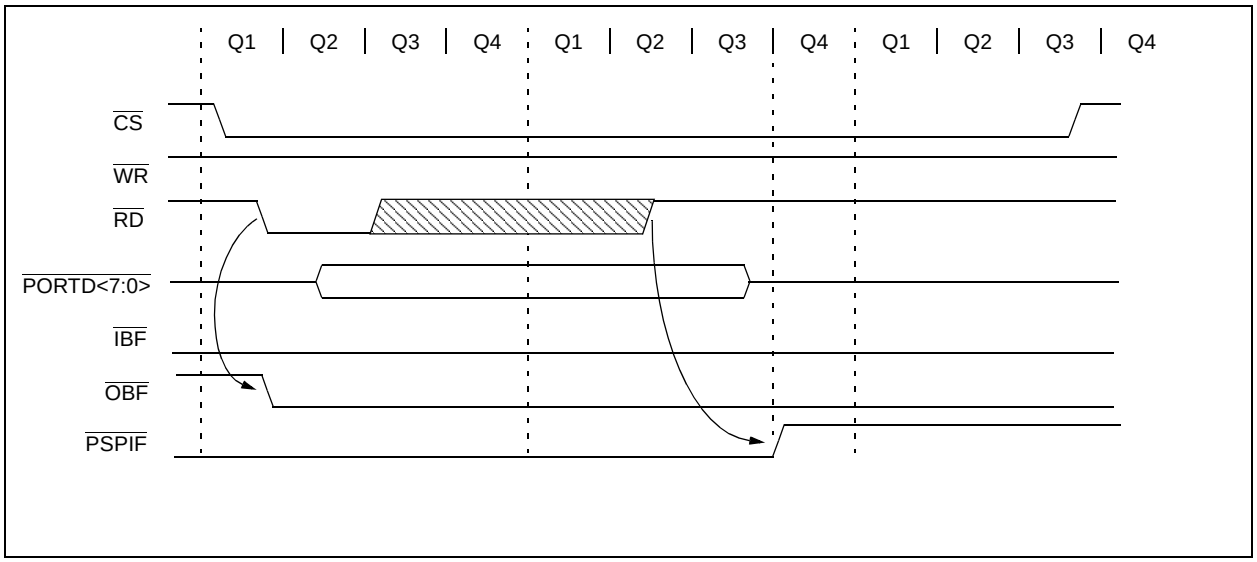

TABLE 8-11: REGISTERS ASSOCIATED WITH PARALLEL SLAVE PORT

Name	Bit 7	Bit 6	Bit 5	Bit 4	Bit 3	Bit 2	Bit 1	Bit 0	Value on POR, BOR	Value on all other resets
PORTD	Port data latch when written; port pins when read								xxxx xxxx	uuuu uuuu
LATD	LATD Data Output Bits								xxxx xxxx	uuuu uuuu
TRISD	PORTD Data Direction Bits								1111 1111	1111 1111
PORTE	—	—	—	—	—	RE2	RE1	RE0	---- -000	---- -000
LATE	—	—	—	—	—	LATE Data Output Bits			---- -xxx	---- -uuu
TRISE	IBF	OBF	IBOV	PSPMODE	—	PORTE Data Direction Bits			0000 -111	0000 -111
INTCON	GIE/ GIEH	PEIE/ GIEL	TMR0IF	INT0IE	RBIE	TMR0IF	INT0IF	RBIF	0000 000x	0000 000u
PIR1	PSPIF	ADIF	RCIF	TXIF	SSPIF	CCP1IF	TMR2IF	TMR1IF	0000 0000	0000 0000
PIE1	PSPIE	ADIE	RCIE	TXIE	SSPIE	CCP1IE	TMR2IE	TMR1IE	0000 0000	0000 0000
IPR1	PSPIP	ADIP	RCIP	TXIP	SSPIP	CCP1IP	TMR2IP	TMR1IP	0000 0000	0000 0000
ADCON1	ADFM	ADCS2	—	—	PCFG3	PCFG2	PCFG1	PCFG0	--0- -000	--0- -000

Legend: x = unknown, u = unchanged, - = unimplemented read as '0'.
Shaded cells are not used by the Parallel Slave Port.

NOTES:

9.0 TIMER0 MODULE

The Timer0 module has the following features:

- Software selectable as an 8-bit or 16-bit timer/counter
- Readable and writable
- Dedicated 8-bit software programmable prescaler
- Clock source selectable to be external or internal
- Interrupt on overflow from FFh to 00h in 8-bit mode and FFFFh to 0000h in 16-bit mode
- Edge select for external clock

Figure 9-1 shows a simplified block diagram of the Timer0 module in 8-bit mode and Figure 9-1 shows a simplified block diagram of the Timer0 module in 16-bit mode.

The T0CON register is a readable and writable register that controls all the aspects of Timer0, including the prescale selection.

Register 9-1: T0CON: Timer0 Control Register

R/W-1	R/W-1	R/W-1	R/W-1	R/W-1	R/W-1	R/W-1	R/W-1
TMR0ON	T08BIT	T0CS	T0SE	PSA	T0PS2	T0PS1	T0PS0
bit 7							bit 0

bit 7 **TMR0ON: Timer0 On/Off Control bit**
`1` = Enables Timer0
`0` = Stops Timer0

bit 6 **T08BIT**: Timer0 8-bit/16-bit Control bit
`1` = Timer0 is configured as an 8-bit timer/counter
`0` = Timer0 is configured as a 16-bit timer/counter

bit 5 **T0CS**: Timer0 Clock Source Select bit
`1` = Transition on T0CKI pin
`0` = Internal instruction cycle clock (CLKOUT)

bit 4 **T0SE**: Timer0 Source Edge Select bit
`1` = Increment on high-to-low transition on T0CKI pin
`0` = Increment on low-to-high transition on T0CKI pin

bit 3 **PSA**: Timer0 Prescaler Assignment bit
`1` = TImer0 prescaler is NOT assigned. Timer0 clock input bypasses prescaler
`0` = Timer0 prescaler is assigned. Timer0 clock input comes from prescaler output

bit 2:0 **T0PS2:T0PS0**: Timer0 Prescaler Select bits

`111` = 1:256 prescale value
`110` = 1:128 prescale value
`101` = 1:64 prescale value
`100` = 1:32 prescale value
`011` = 1:16 prescale value
`010` = 1:8 prescale value
`001` = 1:4 prescale value
`000` = 1:2 prescale value

Legend:			
R = Readable bit	W = Writable bit	U = Unimplemented bit, read as ‘0’	
- n = Value at POR reset	’1’ = Bit is set	’0’ = Bit is cleared	x = Bit is unknown

FIGURE 9-1: TIMER0 BLOCK DIAGRAM IN 8-BIT MODE

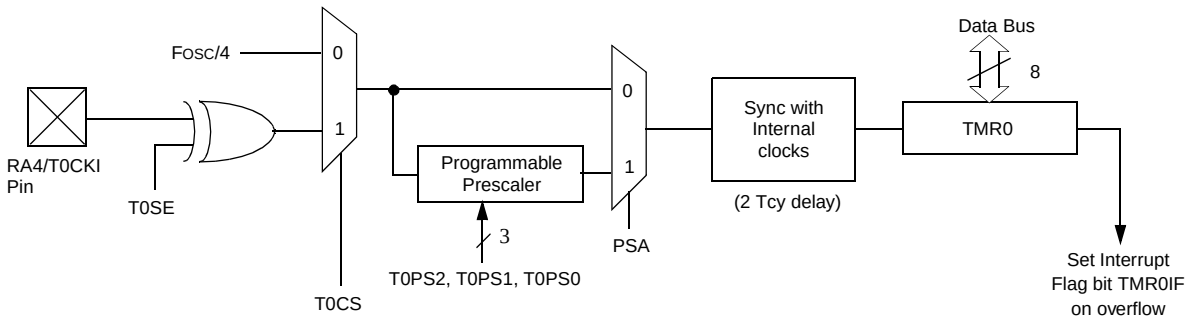

Note: Upon reset, Timer0 is enabled in 8-bit mode with clock input from T0CKI max. prescale.

FIGURE 9-2: TIMER0 BLOCK DIAGRAM IN 16-BIT MODE

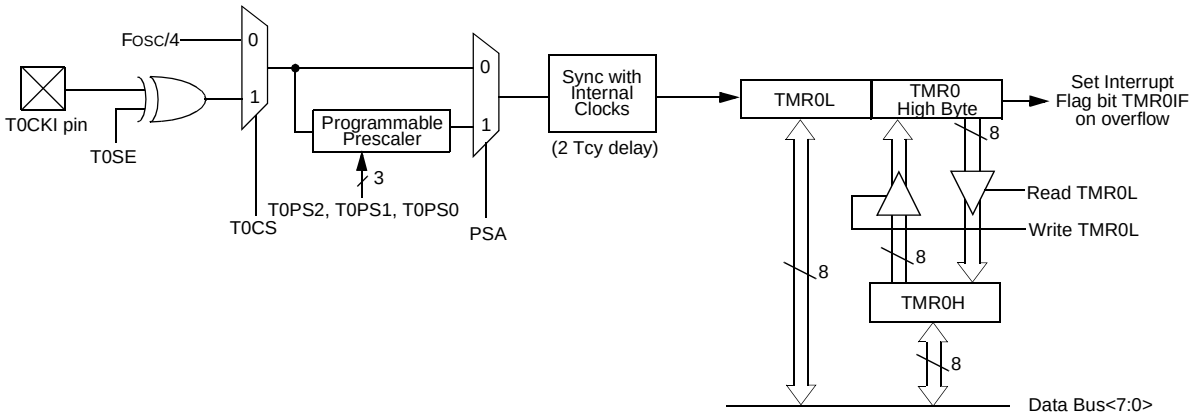

Note: Upon reset, Timer0 is enabled in 8-bit mode with clock input from T0CKI max. prescale.

9.1 Timer0 Operation

Timer0 can operate as a timer or as a counter.

Timer mode is selected by clearing the T0CS bit. In timer mode, the Timer0 module will increment every instruction cycle (without prescaler). If the TMR0 register is written, the increment is inhibited for the following two instruction cycles. The user can work around this by writing an adjusted value to the TMR0 register.

Counter mode is selected by setting the T0CS bit. In counter mode, Timer0 will increment either on every rising or falling edge of pin RA4/T0CKI. The incrementing edge is determined by the Timer0 Source Edge Select bit (T0SE). Clearing the T0SE bit selects the rising edge. Restrictions on the external clock input are discussed below.

When an external clock input is used for Timer0, it must meet certain requirements. The requirements ensure the external clock can be synchronized with the internal phase clock (TOSC). Also, there is a delay in the actual incrementing of Timer0 after synchronization.

9.2 Prescaler

An 8-bit counter is available as a prescaler for the Timer0 module. The prescaler is not readable or writable.

The PSA and T0PS2:T0PS0 bits determine the prescaler assignment and prescale ratio.

Clearing bit PSA will assign the prescaler to the Timer0 module. When the prescaler is assigned to the Timer0 module, prescale values of 1:2, 1:4, ..., 1:256 are selectable.

When assigned to the Timer0 module, all instructions writing to the TMR0 register (e.g. `CLRF TMR0`, `MOVWF TMR0`, `BSF TMR0, x`....etc.) will clear the prescaler count.

Note:	Writing to TMR0 when the prescaler is assigned to Timer0 will clear the prescaler count, but will not change the prescaler assignment.

9.2.1 SWITCHING PRESCALER ASSIGNMENT

The prescaler assignment is fully under software control, (i.e., it can be changed “on-the-fly” during program execution).

9.3 Timer0 Interrupt

The TMR0 interrupt is generated when the TMR0 register overflows from FFh to 00h in 8-bit mode or FFFFh to 0000h in 16-bit mode. This overflow sets the TMR0IF bit. The interrupt can be masked by clearing the TMR0IE bit. The TMR0IE bit must be cleared in software by the Timer0 module interrupt service routine before re-enabling this interrupt. The TMR0 interrupt cannot awaken the processor from SLEEP, since the timer is shut off during SLEEP.

9.4 16-Bit Mode Timer Reads and Writes

TMR0H is not the high byte of the timer/counter in 16-bit mode, but is actually a buffered version of the high byte of Timer0 (refer to Figure 9-1). The high byte of the Timer0 counter/timer is not directly readable nor writable. TMR0H is updated with the contents of the high byte of Timer0 during a read of TMR0L. This provides the ability to read all 16-bits of Timer0 without having to verify that the read of the high and low byte were valid due to a rollover between successive reads of the high and low byte.

A write to the high byte of Timer0 must also take place through the TMR0H buffer register. Timer0 high byte is updated with the contents of TMR0H when a write occurs to TMR0L. This allows all 16 bits of Timer0 to be updated at once.

TABLE 9-1: REGISTERS ASSOCIATED WITH TIMER0

Name	Bit 7	Bit 6	Bit 5	Bit 4	Bit 3	Bit 2	Bit 1	Bit 0	Value on POR, BOR	Value on all other resets
TMR0L	Timer0 Module’s Low Byte Register								xxxx xxxx	uuuu uuuu
TMR0H	Timer0 Module’s High Byte Register								0000 0000	0000 0000
INTCON	GIE/GIEH	PEIE/GIEL	TMR0IE	INT0IE	RBIE	TMR0IF	INT0IF	RBIF	0000 000x	0000 000u
T0CON	TMR0ON	T08BIT	T0CS	T0SE	PSA	T0PS2	T0PS1	T0PS0	1111 1111	1111 1111
TRISA	—	—	PORTA Data Direction Register						--11 1111	--11 1111

Legend: x = unknown, u = unchanged, - = unimplemented locations read as '0'.
Shaded cells are not used by Timer0.

NOTES:

10.0 TIMER1 MODULE

The Timer1 module timer/counter has the following features:

- 16-bit timer/counter
  (Two 8-bit registers; TMR1H and TMR1L)
- Readable and writable (Both registers)
- Internal or external clock select
- Interrupt on overflow from FFFFh to 0000h
- Reset from CCP module special event trigger

Figure 10-1 is a simplified block diagram of the Timer1 module.

Register 10-1 shows the Timer1 control register. This register controls the operating mode of the Timer1 module as well as contains the Timer1 oscillator enable bit (T1OSCEN). Timer1 can be enabled/disabled by setting/clearing control bit TMR1ON (T1CON<0>).

Register 10-1: T1CON: Timer1 Control Register

R/W-0	U-0	R/W-0	R/W-0	R/W-0	R/W-0	R/W-0	R/W-0
RD16	—	T1CKPS1	T1CKPS0	T1OSCEN	$\overline{\text{T1SYNC}}$	TMR1CS	TMR1ON
bit 7							bit 0

bit 7 **RD16:** 16-bit Read/Write Mode Enable bit

1 = Enables register Read/Write of TImer1 in one 16-bit operation
0 = Enables register Read/Write of Timer1 in two 8-bit operations

bit 6 **Unimplemented:** Read as '0'

bit 5:4 **T1CKPS1:T1CKPS0**: Timer1 Input Clock Prescale Select bits

11 = 1:8 Prescale value
10 = 1:4 Prescale value
01 = 1:2 Prescale value
00 = 1:1 Prescale value

bit 3 **T1OSCEN:** Timer1 Oscillator Enable bit

1 = Timer1 Oscillator is enabled
0 = Timer1 Oscillator is shut off.
The oscillator inverter and feedback resistor are turned off to eliminate power drain

bit 2 **$\overline{\text{T1SYNC}}$:** Timer1 External Clock Input Synchronization Select bit

When TMR1CS = 1:

1 = Do not synchronize external clock input
0 = Synchronize external clock input

When TMR1CS = 0:

This bit is ignored. Timer1 uses the internal clock when TMR1CS = 0.

bit 1 **TMR1CS:** Timer1 Clock Source Select bit

1 = External clock from pin RC0/T1OSO/T13CKI (on the rising edge)
0 = Internal clock (FOSC/4)

bit 0 **TMR1ON:** Timer1 On bit

1 = Enables Timer1
0 = Stops Timer1

Legend:			
R = Readable bit	W = Writable bit	U = Unimplemented bit, read as ‘0’	
- n = Value at POR reset	’1’ = Bit is set	’0’ = Bit is cleared	x = Bit is unknown

10.1 Timer1 Operation

Timer1 can operate in one of these modes:

- As a timer
- As a synchronous counter
- As an asynchronous counter

The operating mode is determined by the clock select bit, TMR1CS (T1CON<1>).

When TMR1CS = 0, Timer1 increments every instruction cycle. When TMR1CS = 1, Timer1 increments on every rising edge of the external clock input or the Timer1 oscillator, if enabled.

When the Timer1 oscillator is enabled (T1OSCEN is set), the RC1/T1OSI and RC0/T1OSO/T1CKI pins become inputs. That is, the TRISC<1:0> value is ignored.

Timer1 also has an internal "reset input". This reset can be generated by the CCP module (Section 13.0).

FIGURE 10-1: TIMER1 BLOCK DIAGRAM

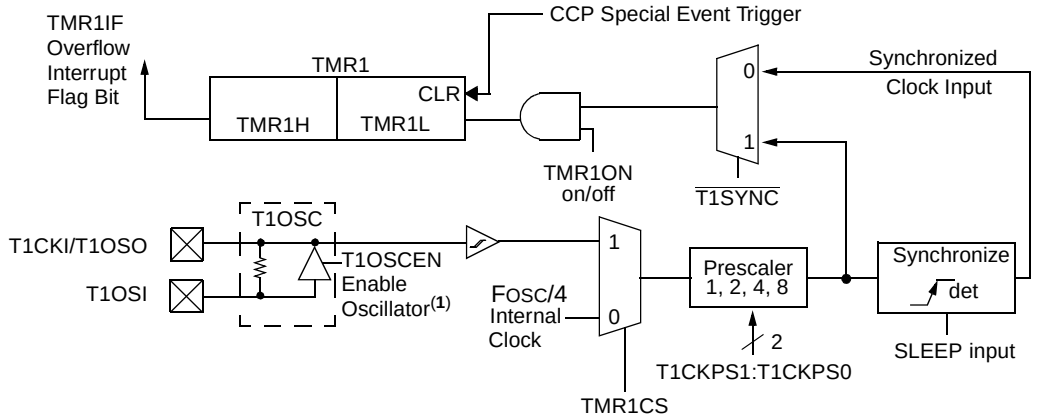

Note 1: When enable bit T1OSCEN is cleared, the inverter and feedback resistor are turned off. This eliminates power drain.

FIGURE 10-2: TIMER1 BLOCK DIAGRAM: 16-BIT READ/WRITE MODE

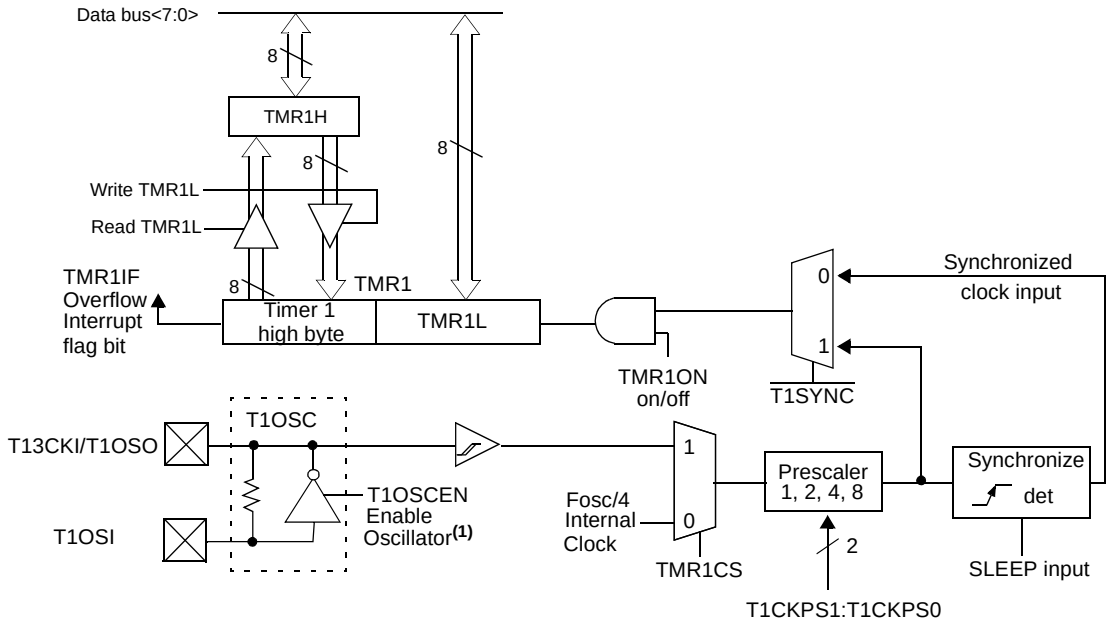

Note 1: When enable bit T1OSCEN is cleared, the inverter and feedback resistor are turned off. This eliminates power drain.

10.2 Timer1 Oscillator

A crystal oscillator circuit is built-in between pins T1OSI (input) and T1OSO (amplifier output). It is enabled by setting control bit T1OSCEN (T1CON<3>). The oscillator is a low power oscillator rated up to 200 kHz. It will continue to run during SLEEP. It is primarily intended for a 32 kHz crystal. Table 10-1 shows the capacitor selection for the Timer1 oscillator.

The user must provide a software time delay to ensure proper start-up of the Timer1 oscillator.

TABLE 10-1: CAPACITOR SELECTION FOR THE ALTERNATE OSCILLATOR

Osc Type	Freq	C1	C2
LP	32 kHz	TBD (1)	TBD (1)

Crystal to be Tested:		
32.768 kHz	Epson C-001R32.768K-A	± 20 PPM

Note 1: Microchip suggests 33 pF as a starting point in validating the oscillator circuit.
2: Higher capacitance increases the stability of the oscillator, but also increases the start-up time.
3: Since each resonator/crystal has its own characteristics, the user should consult the resonator/crystal manufacturer for appropriate values of external components.
4: Capacitor values are for design guidance only.

10.3 Timer1 Interrupt

The TMR1 Register pair (TMR1H:TMR1L) increments from 0000h to FFFFh and rolls over to 0000h. The TMR1 Interrupt, if enabled, is generated on overflow, which is latched in interrupt flag bit TMR1IF (PIR1<0>). This interrupt can be enabled/disabled by setting/clearing TMR1 interrupt enable bit TMR1IE (PIE1<0>).

10.4 Resetting Timer1 using a CCP Trigger Output

If the CCP module is configured in compare mode to generate a “special event trigger" (CCP1M3:CCP1M0 = 1011), this signal will reset Timer1 and start an A/D conversion (if the A/D module is enabled).

Note: The special event triggers from the CCP1 module will not set interrupt flag bit TMR1IF (PIR1<0>).

Timer1 must be configured for either timer or synchronized counter mode to take advantage of this feature. If Timer1 is running in asynchronous counter mode, this reset operation may not work.

In the event that a write to Timer1 coincides with a special event trigger from CCP1, the write will take precedence.

In this mode of operation, the CCPR1H:CCPR1L registers pair effectively becomes the period register for Timer1.

10.5 Timer1 16-Bit Read/Write Mode

Timer1 can be configured for 16-bit reads and writes (see Figure 10-2). When the RD16 control bit (T1CON<7>) is set, the address for TMR1H is mapped to a buffer register for the high byte of Timer1. A read from TMR1L will load the contents of the high byte of Timer1 into the Timer1 high byte buffer. This provides the user with the ability to accurately read all 16-bits of Timer1 without having to determine whether a read of the high byte followed by a read of the low byte is valid due to a rollover between reads.

A write to the high byte of Timer1 must also take place through the TMR1H buffer register. Timer1 high byte is updated with the contents of TMR1H when a write occurs to TMR1L. This allows a user to write all 16 bits to both the high and low bytes of Timer1 at once.

The high byte of Timer1 is not directly readable or writable in this mode. All reads and writes must take place through the Timer1 high byte buffer register. Writes to TMR1H do not clear the Timer1 prescaler. The prescaler is only cleared on writes to TMR1L.

TABLE 10-2: REGISTERS ASSOCIATED WITH TIMER1 AS A TIMER/COUNTER

Name	Bit 7	Bit 6	Bit 5	Bit 4	Bit 3	Bit 2	Bit 1	Bit 0	Value on POR, BOR	Value on all other resets
INTCON	GIE/ GIEH	PEIE/ GIEL	TMR0IE	INT0IE	RBIE	TMR0IF	INT0IF	RBIF	0000 000x	0000 000u
PIR1	PSPIF (1)	ADIF	RCIF	TXIF	SSPIF	CCP1IF	TMR2IF	TMR1IF	0000 0000	0000 0000
PIE1	PSPIE (1)	ADIE	RCIE	TXIE	SSPIE	CCP1IE	TMR2IE	TMR1IE	0000 0000	0000 0000
IPR1	PSPIP (1)	ADIP	RCIP	TXIP	SSPIP	CCP1IP	TMR2IP	TMR1IP	0000 0000	0000 0000
TMR1L	Holding register for the Least Significant Byte of the 16-bit TMR1 register								xxxx xxxx	uuuu uuuu
TMR1H	Holding register for the Most Significant Byte of the 16-bit TMR1 register								xxxx xxxx	uuuu uuuu
T1CON	—	—	T1CKPS1	T1CKPS0	T1OSCEN	T1SYNC	TMR1CS	TMR1ON	--00 0000	--uu uuuu

Legend: x = unknown, u = unchanged, - = unimplemented read as ’0’.
Shaded cells are not used by the Timer1 module.

Note 1: The PSPIF, PSPIE and PSPIP bits are reserved on the PIC18C2X2 devices. Always maintain these bits clear.

NOTES:

11.0 TIMER2 MODULE

The Timer2 module timer has the following features:

- 8-bit timer (TMR2 register)
- 8-bit period register (PR2)
- Readable and writable (both registers)
- Software programmable prescaler (1:1, 1:4, 1:16)
- Software programmable postscaler (1:1 to 1:16)
- Interrupt on TMR2 match of PR2
- SSP module optional use of TMR2 output to generate clock shift

Timer2 has a control register shown in Register 11-1. Timer2 can be shut off by clearing control bit TMR2ON (T2CON<2>) to minimize power consumption. Figure 11-1 is a simplified block diagram of the Timer2 module. Figure 11-1 shows the Timer2 control register. The prescaler and postscaler selection of Timer2 are controlled by this register.

11.1 Timer2 Operation

Timer2 can be used as the PWM time-base for the PWM mode of the CCP module. The TMR2 register is readable and writable, and is cleared on any device reset. The input clock (Fosc/4) has a prescale option of 1:1, 1:4 or 1:16, selected by control bits T2CKPS1:T2CKPS0 (T2CON<1:0>). The match output of TMR2 goes through a 4-bit postscaler (which gives a 1:1 to 1:16 scaling inclusive) to generate a TMR2 interrupt (latched in flag bit TMR2IF, (PIR1<1>)).

The prescaler and postscaler counters are cleared when any of the following occurs:

- a write to the TMR2 register
- a write to the T2CON register
- any device reset (Power-on Reset, $\overline{\text{MCLR}}$ reset, Watchdog Timer reset, or Brown-out Reset)

TMR2 is not cleared when T2CON is written.

Register 11-1: T2CON: Timer2 Control Register

U-0	R/W-0	R/W-0	R/W-0	R/W-0	R/W-0	R/W-0	R/W-0
—	TOUTPS3	TOUTPS2	TOUTPS1	TOUTPS0	TMR2ON	T2CKPS1	T2CKPS0
bit 7							bit 0

bit 7 **Unimplemented:** Read as '0'

bit 6:3 **TOUTPS3:TOUTPS0**: Timer2 Output Postscale Select bits

`0000` = 1:1 Postscale
`0001` = 1:2 Postscale
•
•
•
`1111` = 1:16 Postscale

bit 2 **TMR2ON**: Timer2 On bit

`1` = Timer2 is on
`0` = Timer2 is off

bit 1:0 **T2CKPS1:T2CKPS0**: Timer2 Clock Prescale Select bits

`00` = Prescaler is 1
`01` = Prescaler is 4
`1x` = Prescaler is 16

Legend:			
R = Readable bit	W = Writable bit	U = Unimplemented bit, read as ‘0’	
- n = Value at POR reset	’1’ = Bit is set	’0’ = Bit is cleared	x = Bit is unknown

11.2 Timer2 Interrupt

The Timer2 module has an 8-bit period register PR2. Timer2 increments from 00h until it matches PR2 and then resets to 00h on the next increment cycle. PR2 is a readable and writable register. The PR2 register is initialized to FFh upon reset.

11.3 Output of TMR2

The output of TMR2 (before the postscaler) is fed to the Synchronous Serial Port module, which optionally uses it to generate the shift clock.

FIGURE 11-1: TIMER2 BLOCK DIAGRAM

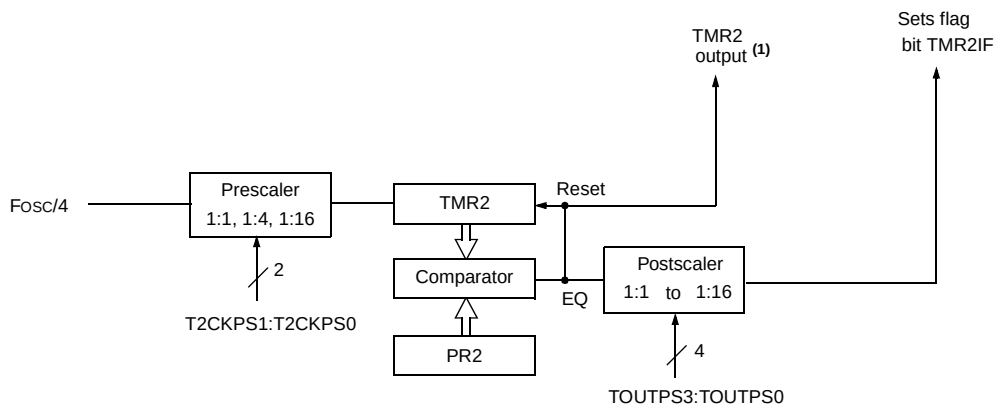

Note 1: TMR2 register output can be software selected by the SSP Module as a baud clock.

TABLE 11-1: REGISTERS ASSOCIATED WITH TIMER2 AS A TIMER/COUNTER

Name	Bit 7	Bit 6	Bit 5	Bit 4	Bit 3	Bit 2	Bit 1	Bit 0	Value on POR, BOR	Value on all other resets
INTCON	GIE/GIEH	PEIE/GIEL	TMR0IE	INT0IE	RBIE	TMR0IF	INT0IF	RBIF	0000 000x	0000 000u
PIR1	PSPIF (1)	ADIF	RCIF	TXIF	SSPIF	CCP1IF	TMR2IF	TMR1IF	0000 0000	0000 0000
PIE1	PSPIE (1)	ADIE	RCIE	TXIE	SSPIE	CCP1IE	TMR2IE	TMR1IE	0000 0000	0000 0000
IPR1	PSPIP (1)	ADIP	RCIP	TXIP	SSPIP	CCP1IP	TMR2IP	TMR1IP	0000 0000	0000 0000
TMR2	Timer2 module's register								0000 0000	0000 0000
T2CON	—	TOUTPS3	TOUTPS2	TOUTPS1	TOUTPS0	TMR2ON	T2CKPS1	T2CKPS0	-000 0000	-000 0000
PR2	Timer2 Period Register								1111 1111	1111 1111

Legend: x = unknown, u = unchanged, - = unimplemented read as '0'. Shaded cells are not used by the Timer2 module.

Note 1: The PSPIF, PSPIE and PSPIP bits are reserved on the PIC18C2X2 devices. Always maintain these bits clear.

NOTES:

12.0 TIMER3 MODULE

The Timer3 module timer/counter has the following features:

- 16-bit timer/counter
  (Two 8-bit registers; TMR3H and TMR3L)
- Readable and writable (both registers)
- Internal or external clock select
- Interrupt on overflow from FFFFh to 0000h
- Reset from CCP module trigger

Figure 12-1 is a simplified block diagram of the Timer3 module.

Register 12-1 shows the Timer3 control register. This register controls the operating mode of the Timer3 module and sets the CCP clock source.

Register 10-1 shows the Timer1 control register. This register controls the operating mode of the Timer1 module, as well as contains the Timer1 oscillator enable bit (T1OSCEN), which can be a clock source for Timer3.

Register 12-1: T3CON: Timer3 Control Register

R/W-0	R/W-0	R/W-0	R/W-0	R/W-0	R/W-0	R/W-0	R/W-0
RD16	T3CCP2	T3CKPS1	T3CKPS0	T3CCP1	$\overline{\text{T3SYNC}}$	TMR3CS	TMR3ON
bit 7							bit 0

bit 7 **RD16:** 16-bit Read/Write Mode Enable
1 = Enables register Read/Write of Timer3 in one 16-bit operation
0 = Enables register Read/Write of Timer3 in two 8-bit operations

bit 6,3 **T3CCP2:T3CCP1:** Timer3 and Timer1 to CCPx Enable bits
1x = Timer3 is the clock source for compare/capture CCP modules
01 = Timer3 is the clock source for compare/capture of CCP2,
Timer1 is the clock source for compare/capture of CCP1
00 = Timer1 is the clock source for compare/capture CCP modules

bit 5:4 **T3CKPS1:T3CKPS0**: Timer3 Input Clock Prescale Select bits
11 = 1:8 Prescale value
10 = 1:4 Prescale value
01 = 1:2 Prescale value
00 = 1:1 Prescale value

bit 2 **$\overline{\text{T3SYNC}}$:** Timer3 External Clock Input Synchronization Control bit
(Not usable if the system clock comes from Timer1/Timer3)

When TMR3CS = 1:
1 = Do not synchronize external clock input
0 = Synchronize external clock input

When TMR3CS = 0:
This bit is ignored. Timer3 uses the internal clock when TMR3CS = 0.

bit 1 **TMR3CS:** Timer3 Clock Source Select bit
1 = External clock input from Timer1 oscillator or T1CKI (on the rising edge after the first falling edge)
0 = Internal clock (Fosc/4)

bit 0 **TMR3ON:** Timer3 On bit
1 = Enables Timer3
0 = Stops Timer3

Legend:			
R = Readable bit	W = Writable bit	U = Unimplemented bit, read as ‘0’	
- n = Value at POR reset	’1’ = Bit is set	’0’ = Bit is cleared	x = Bit is unknown

12.1 Timer3 Operation

Timer3 can operate in one of these modes:

- As a timer
- As a synchronous counter
- As an asynchronous counter

The operating mode is determined by the clock select bit, TMR3CS (T3CON<1>).

When TMR3CS = 0, Timer3 increments every instruction cycle. When TMR3CS = 1, Timer3 increments on every rising edge of the Timer1 external clock input or the Timer1 oscillator, if enabled.

When the Timer1 oscillator is enabled (T1OSCEN is set), the RC1/T1OSI and RC0/T1OSO/T1CKI pins become inputs. That is, the TRISC<1:0> value is ignored.

Timer3 also has an internal "reset input". This reset can be generated by the CCP module (Section 12.0).

FIGURE 12-1: TIMER3 BLOCK DIAGRAM

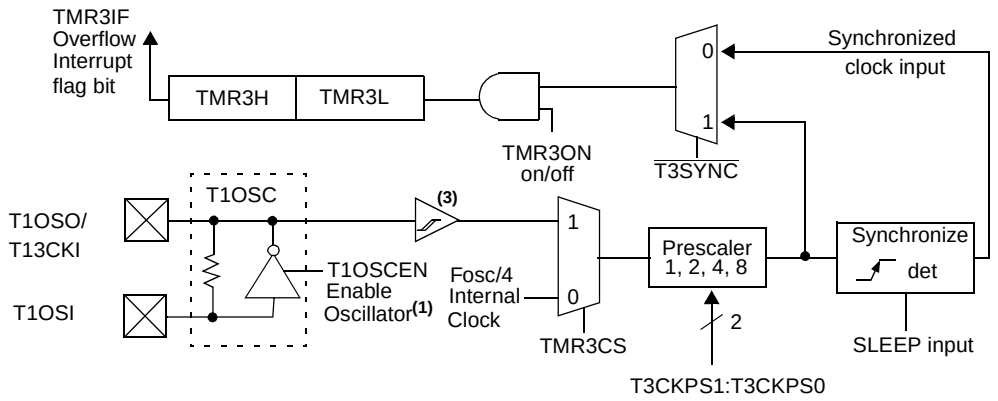

Note 1: When enable bit T1OSCEN is cleared, the inverter and feedback resistor are turned off. This eliminates power drain.

FIGURE 12-2: TIMER3 BLOCK DIAGRAM CONFIGURED IN 16-BIT MODE

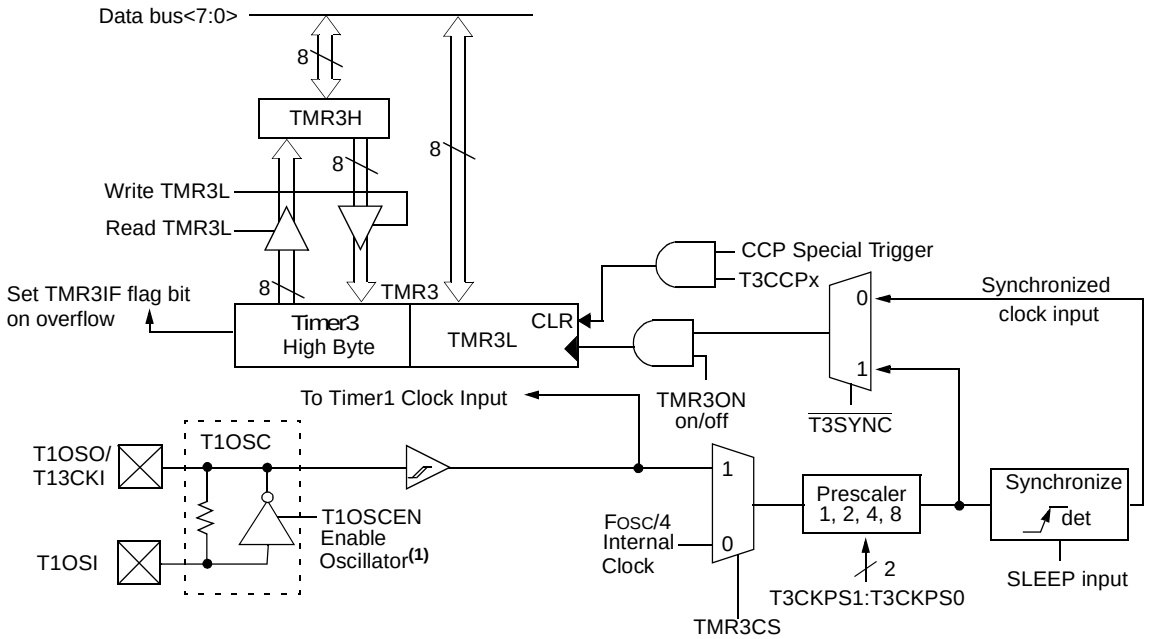

Note 1: When the T1OSCEN bit is cleared, the inverter and feedback resistor are turned off. This eliminates power drain.

12.2 Timer1 Oscillator

The Timer1 oscillator may be used as the clock source for Timer3. The Timer1 oscillator is enabled by setting the T1OSCEN (T1CON<3>) bit. The oscillator is a low power oscillator rated up to 200 KHz. See Section 10.0 for further details.

12.3 Timer3 Interrupt

The TMR3 Register pair (TMR3H:TMR3L) increments from 0000h to FFFFh and rolls over to 0000h. The TMR3 Interrupt, if enabled, is generated on overflow which is latched in interrupt flag bit TMR3IF (PIR2<1>). This interrupt can be enabled/disabled by setting/clearing TMR3 interrupt enable bit TMR3IE (PIE2<1>).

12.4 Resetting Timer3 Using a CCP Trigger Output

If the CCP module is configured in compare mode to generate a “special event trigger" (CCP1M3:CCP1M0 = 1011), this signal will reset Timer3.

Note:	The special event triggers from the CCP module will not set interrupt flag bit TMR3IF (PIR1<0>).

Timer3 must be configured for either timer or synchronized counter mode to take advantage of this feature. If Timer3 is running in asynchronous counter mode, this reset operation may not work. In the event that a write to Timer3 coincides with a special event trigger from CCP1, the write will take precedence. In this mode of operation, the CCPR1H:CCPR1L registers pair effectively becomes the period register for Timer3.

TABLE 12-1: REGISTERS ASSOCIATED WITH TIMER3 AS A TIMER/COUNTER

Name	Bit 7	Bit 6	Bit 5	Bit 4	Bit 3	Bit 2	Bit 1	Bit 0	Value on POR, BOR	Value on all other resets
INTCON	GIE/ GIEH	PEIE/ GIEL	TMR0IE	INT0IE	RBIE	TMR0IF	INT0IF	RBIF	0000 000x	0000 000u
PIR2	—	—	—	—	BCLIF	LVDIF	TMR3IF	CCP2IF	0000 0000	0000 0000
PIE2	—	—	—	—	BCLIE	LVDIE	TMR3IE	CCP2IE	0000 0000	0000 0000
IPR2	—	—	—	—	BCLIP	LVDIP	TMR3IP	CCP2IP	0000 0000	0000 0000
TMR3L	Holding register for the Least Significant Byte of the 16-bit TMR3 register								xxxx xxxx	uuuu uuuu
TMR3H	Holding register for the Most Significant Byte of the 16-bit TMR3 register								xxxx xxxx	uuuu uuuu
T1CON	—	—	T1CKPS1	T1CKPS0	T1OSCEN	T1SYNC	TMR1CS	TMR1ON	--00 0000	--uu uuuu
T3CON	—	T3CKPS2	T3CKPS1	T3CKPS0	T3CCP1	T3SYNC	TMR3CS	TMR3ON	-000 0000	-uuu uuuu

Legend: x = unknown, u = unchanged, - = unimplemented read as ’0’. Shaded cells are not used by the Timer1 module.

NOTES:

13.0 CAPTURE/COMPARE/PWM (CCP) MODULES

Each CCP (Capture/Compare/PWM) module contains a 16-bit register which can operate as a 16-bit capture register, as a 16-bit compare register or as a PWM master/slave Duty Cycle register. Table 13-1 shows the timer resources of the CCP module modes.

The operation of CCP1 is identical to that of CCP2, with the exception of the special event trigger. Therefore, operation of a CCP module in the following sections is described with respect to CCP1.

Table 13-2 shows the interaction of the CCP modules.

Register 13-1: CCP1CON Register/CCP2CON Register

U-0	U-0	R/W-0	R/W-0	R/W-0	R/W-0	R/W-0	R/W-0
—	—	DCxB1	DCxB0	CCPxM3	CCPxM2	CCPxM1	CCPxM0
bit 7							bit 0

bit 7:6 **Unimplemented:** Read as '0'

bit 5:4 **DCxB1:DCxB0**: PWM Duty Cycle bit1 and bit0

Capture Mode:
Unused

Compare Mode:
Unused

PWM Mode:

These bits are the two LSbs (bit1 and bit0) of the 10-bit PWM duty cycle. The upper eight bits (DCx9:DCx2) of the duty cycle are found in CCPRxL.

bit 3:0 **CCPxM3:CCPxM0**: CCPx Mode Select bits

`0000` = Capture/Compare/PWM off (resets CCPx module)

`0001` = Reserved

`0010` = Compare mode, toggle output on match (CCPxIF bit is set)
`0011` = Reserved
`0100` = Capture mode, every falling edge
`0101` = Capture mode, every rising edge
`0110` = Capture mode, every 4th rising edge
`0111` = Capture mode, every 16th rising edge
`1000` = Compare mode,
Initialize CCP pin Low, on compare match force CCP pin High (CCPIF bit is set)
`1001` = Compare mode,
Initialize CCP pin High, on compare match force CCP pin Low (CCPIF bit is set)
`1010` = Compare mode,
Generate software interrupt on compare match
(CCPIF bit is set, CCP pin is unaffected)
`1011` = Compare mode,
Trigger special event (CCPIF bit is set)
`11xx` = PWM mode

Legend:			
R = Readable bit	W = Writable bit	U = Unimplemented bit, read as ‘0’	
- n = Value at POR reset	’1’ = Bit is set	’0’ = Bit is cleared	x = Bit is unknown

13.1 CCP1 Module

Capture/Compare/PWM Register1 (CCPR1) is comprised of two 8-bit registers: CCPR1L (low byte) and CCPR1H (high byte). The CCP1CON register controls the operation of CCP1. All are readable and writable.

13.2 CCP2 Module

Capture/Compare/PWM Register2 (CCPR2) is comprised of two 8-bit registers: CCPR2L (low byte) and CCPR2H (high byte). The CCP2CON register controls the operation of CCP2. All are readable and writable.

TABLE 13-1: CCP MODE - TIMER RESOURCE

CCP Mode	Timer Resource
Capture	Timer1 or Timer3
Compare	Timer1 or Timer3
PWM	Timer2

TABLE 13-2: INTERACTION OF TWO CCP MODULES

CCPx Mode	CCPy Mode	Interaction
Capture	Capture	TMR1 or TMR3 time-base. Time base can be different for each CCP.
Capture	Compare	The compare could be configured for the special event trigger, which clears either TMR1 or TMR3 depending upon which time base is used.
Compare	Compare	The compare(s) could be configured for the special event trigger, which clears TMR1 or TMR3 depending upon which time base is used.
PWM	PWM	The PWMs will have the same frequency and update rate (TMR2 interrupt).
PWM	Capture	None
PWM	Compare	None

13.3 Capture Mode

In Capture mode, CCPR1H:CCPR1L captures the 16-bit value of the TMR1 or TMR3 registers when an event occurs on pin RC2/CCP1. An event is defined as:

- every falling edge
- every rising edge
- every 4th rising edge
- every 16th rising edge

An event is selected by control bits CCP1M3:CCP1M0 (CCP1CON<3:0>). When a capture is made, the interrupt request flag bit CCP1IF (PIR1<2>) is set. It must be cleared in software. If another capture occurs before the value in register CCPR1 is read, the old captured value will be lost.

13.3.1 CCP PIN CONFIGURATION

In Capture mode, the RC2/CCP1 pin should be configured as an input by setting the TRISC<2> bit.

Note:	If the RC2/CCP1 is configured as an output, a write to the port can cause a capture condition.

13.3.2 TIMER1/TIMER3 MODE SELECTION

The timers that are to be used with the capture feature (either Timer1 and/or Timer3) must be running in timer mode or synchronized counter mode. In asynchronous counter mode, the capture operation may not work. The timer to be used with each CCP module is selected in the T3CON register.

13.3.3 SOFTWARE INTERRUPT

When the Capture mode is changed, a false capture interrupt may be generated. The user should keep bit CCP1IE (PIE1<2>) clear to avoid false interrupts and should clear the flag bit CCP1IF following any such change in operating mode.

13.3.4 CCP PRESCALER

There are four prescaler settings, specified by bits CCP1M3:CCP1M0. Whenever the CCP module is turned off or the CCP module is not in capture mode, the prescaler counter is cleared. This means that any reset will clear the prescaler counter.

Switching from one capture prescaler to another may generate an interrupt. Also, the prescaler counter will not be cleared, therefore the first capture may be from a non-zero prescaler. Example 13-1 shows the recommended method for switching between capture prescalers. This example also clears the prescaler counter and will not generate the “false” interrupt.

EXAMPLE 13-1: CHANGING BETWEEN CAPTURE PRESCALERS

```
CLRF    CCP1CON, F   ; Turn CCP module off
MOVLW   NEW_CAPT_PS  ; Load WREG with the
                     ; new prescaler mode
                     ; value and CCP ON
MOVWF   CCP1CON      ; Load CCP1CON with
                     ; this value
```

FIGURE 13-1: CAPTURE MODE OPERATION BLOCK DIAGRAM

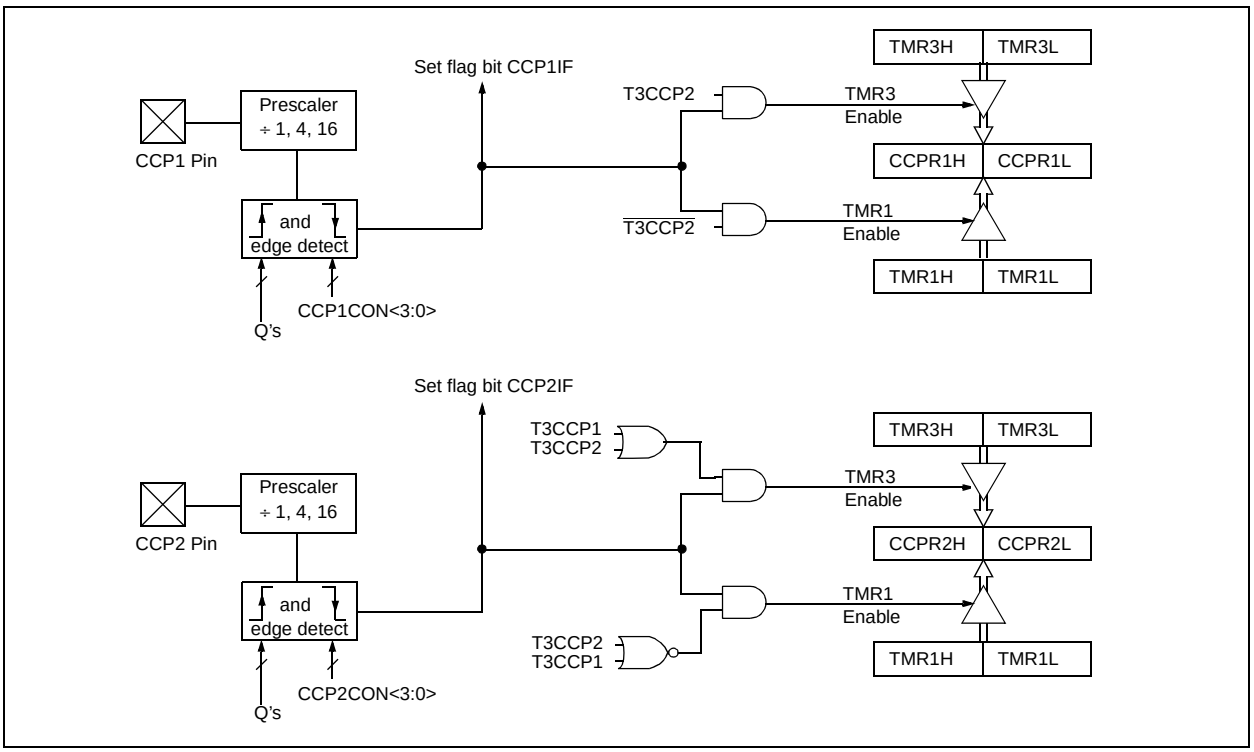

13.4 Compare Mode

In Compare mode, the 16-bit CCPR1 (CCPR2) register value is constantly compared against either the TMR1 register pair value or the TMR3 register pair value. When a match occurs, the RC2/CCP1 (RC1/CCP2) pin is:

- driven High
- driven Low
- toggle output (High to Low or Low to High)
- remains Unchanged

The action on the pin is based on the value of control bits CCP1M3:CCP1M0 (CCP2M3:CCP2M0). At the same time, interrupt flag bit CCP1IF (CCP2IF) is set.

13.4.1 CCP PIN CONFIGURATION

The user must configure the CCPx pin as an output by clearing the appropriate TRISC bit.

Note:	Clearing the CCP1CON register will force the RC2/CCP1 compare output latch to the default low level. This is not the data latch.

13.4.2 TIMER1/TIMER3 MODE SELECTION

Timer1 and/or Timer3 must be running in Timer mode or Synchronized Counter mode if the CCP module is using the compare feature. In Asynchronous Counter mode, the compare operation may not work.

13.4.3 SOFTWARE INTERRUPT MODE

When generate software interrupt is chosen, the CCP1 pin is not affected. Only a CCP interrupt is generated (if enabled).

13.4.4 SPECIAL EVENT TRIGGER

In this mode, an internal hardware trigger is generated, which may be used to initiate an action.

The special event trigger output of CCP1 resets the TMR1 register pair. This allows the CCPR1 register to effectively be a 16-bit programmable period register for Timer1.

The special trigger output of CCPx resets either the TMR1 or TMR3 register pair. Additionally, the CCP2 Special Event Trigger will start an A/D conversion if the A/D module is enabled.

Note:	The special event trigger from the CCP2 module will not set the Timer1 or Timer3 interrupt flag bits.

FIGURE 13-2: COMPARE MODE OPERATION BLOCK DIAGRAM

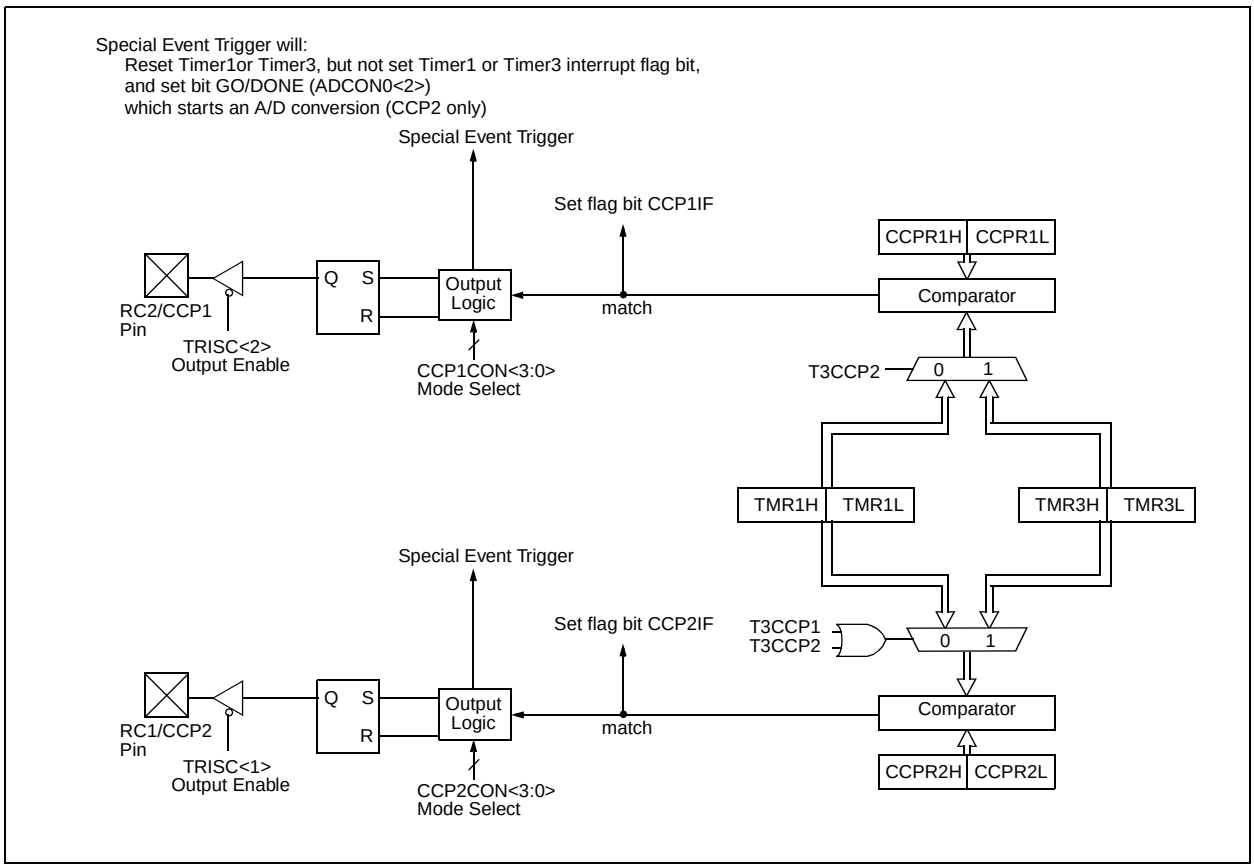

TABLE 13-3: REGISTERS ASSOCIATED WITH CAPTURE, COMPARE, TIMER1 AND TIMER3

Name	Bit 7	Bit 6	Bit 5	Bit 4	Bit 3	Bit 2	Bit 1	Bit 0	Value on POR, BOR	Value on all other resets
INTCON	GIE/ GIEH	PEIE/ GIEL	TMR0IE	INT0IE	RBIE	TMR0IF	INT0IF	RBIF	0000 000x	0000 000u
PIR1	PSPIF (1)	ADIF	RCIF	TXIF	SSPIF	CCP1IF	TMR2IF	TMR1IF	0000 0000	0000 0000
PIE1	PSPIE (1)	ADIE	RCIE	TXIE	SSPIE	CCP1IE	TMR2IE	TMR1IE	0000 0000	0000 0000
IPR1	PSPIP (1)	ADIP	RCIP	TXIP	SSPIP	CCP1IP	TMR2IP	TMR1IP	0000 0000	0000 0000
TRISC	PORTC Data Direction Register								1111 1111	1111 1111
TMR1L	Holding register for the Least Significant Byte of the 16-bit TMR1 register								xxxx xxxx	uuuu uuuu
TMR1H	Holding register for the Most Significant Byte of the 16-bit TMR1register								xxxx xxxx	uuuu uuuu
T1CON	—	—	T1CKPS1	T1CKPS0	T1OSCEN	T1SYNC	TMR1CS	TMR1ON	--00 0000	--uu uuuu
CCPR1L	Capture/Compare/PWM register1 (LSB)								xxxx xxxx	uuuu uuuu
CCPR1H	Capture/Compare/PWM register1 (MSB)								xxxx xxxx	uuuu uuuu
CCP1CON	—	—	DC1B1	DC1B0	CCP1M3	CCP1M2	CCP1M1	CCP1M0	--00 0000	--00 0000
CCPR2L	Capture/Compare/PWM register2 (LSB)								xxxx xxxx	uuuu uuuu
CCPR2H	Capture/Compare/PWM register2 (MSB)								xxxx xxxx	uuuu uuuu
CCP2CON	—	—	DC2B1	DC2B0	CCP2M3	CCP2M2	CCP2M1	CCP2M0	--00 0000	--00 0000
PIR2	—	—	—	—	BCLIF	LVDIF	TMR3IF	CCP2IF	0000 0000	0000 0000
PIE2	—	—	—	—	BCLIE	LVDIE	TMR3IE	CCP2IE	0000 0000	0000 0000
IPR2	—	—	—	—	BCLIP	LVDIP	TMR3IP	CCP2IP	0000 0000	0000 0000
TMR3L	Holding register for the Least Significant Byte of the 16-bit TMR3 register								xxxx xxxx	uuuu uuuu
TMR3H	Holding register for the Most Significant Byte of the 16-bit TMR3 register								xxxx xxxx	uuuu uuuu
T3CON	—	T3CKPS2	T3CKPS1	T3CKPS0	T3CCP1	T3SYNC	TMR3CS	TMR3ON	-000 0000	-uuu uuuu

Legend: x = unknown, u = unchanged, - = unimplemented read as ’0’.
Shaded cells are not used by Capture and Timer1.

Note 1: The PSPIF, PSPIE and PSPIP bits are reserved on the PIC18C2x2 devices. Always maintain these bits clear.

13.5 PWM Mode

In Pulse Width Modulation (PWM) mode, the CCP1 pin produces up to a 10-bit resolution PWM output. Since the CCP1 pin is multiplexed with the PORTC data latch, the TRISC<2> bit must be cleared to make the CCP1 pin an output.

Note:	Clearing the CCP1CON register will force the CCP1 PWM output latch to the default low level. This is not the PORTC I/O data latch.

Figure 13-3 shows a simplified block diagram of the CCP module in PWM mode.

For a step by step procedure on how to set up the CCP module for PWM operation, see Section 13.5.3.

FIGURE 13-3: SIMPLIFIED PWM BLOCK DIAGRAM

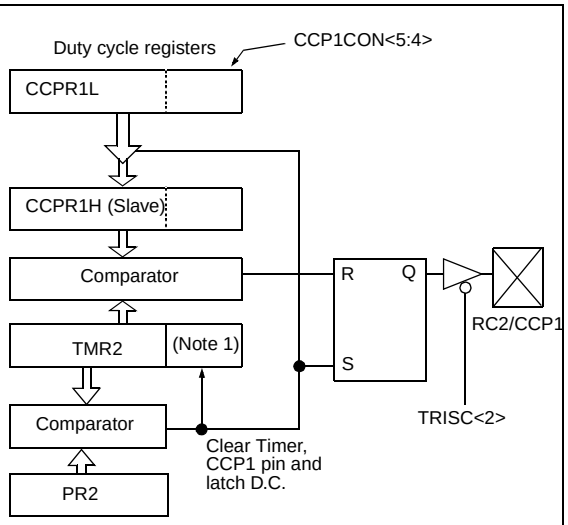

Note: 8-bit timer is concatenated with 2-bit internal Q clock or 2 bits of the prescaler to create 10-bit time-base.

A PWM output (Figure 13-4) has a time base (period) and a time that the output stays high (duty cycle). The frequency of the PWM is the inverse of the period (1/period).

FIGURE 13-4: PWM OUTPUT

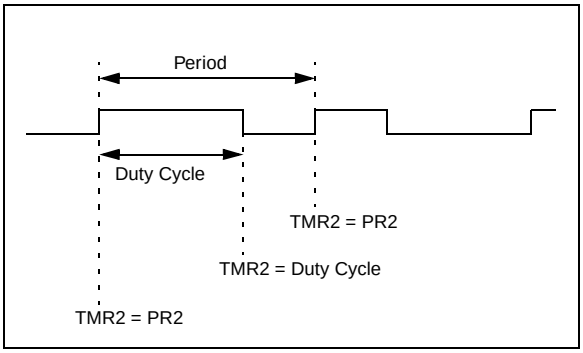

13.5.1 PWM PERIOD

The PWM period is specified by writing to the PR2 register. The PWM period can be calculated using the following formula:

$$\text{PWM period} = (PR2) + 1] \cdot 4 \cdot T_{OSC} \cdot (\text{TMR2 prescale value})$$

PWM frequency is defined as 1 / [PWM period].

When TMR2 is equal to PR2, the following three events occur on the next increment cycle:

- TMR2 is cleared
- The CCP1 pin is set (exception: if PWM duty cycle = 0%, the CCP1 pin will not be set)
- The PWM duty cycle is latched from CCPR1L into CCPR1H

Note:	The Timer2 postscaler (see Section 10.0) is not used in the determination of the PWM frequency. The postscaler could be used to have a servo update rate at a different frequency than the PWM output.

13.5.2 PWM DUTY CYCLE

The PWM duty cycle is specified by writing to the CCPR1L register and to the CCP1CON<5:4> bits. Up to 10-bit resolution is available. The CCPR1L contains the eight MSbs and the CCP1CON<5:4> contains the two LSbs. This 10-bit value is represented by CCPR1L:CCP1CON<5:4>. The following equation is used to calculate the PWM duty cycle in time:

$$\text{PWM duty cycle} = (\text{CCPR1L:CCP1CON<5:4>}) \cdot T_{OSC} \cdot (\text{TMR2 prescale value})$$

CCPR1L and CCP1CON<5:4> can be written to at any time, but the duty cycle value is not latched into CCPR1H until after a match between PR2 and TMR2 occurs (i.e., the period is complete). In PWM mode, CCPR1H is a read-only register.

The CCPR1H register and a 2-bit internal latch are used to double buffer the PWM duty cycle. This double buffering is essential for glitchless PWM operation.

When the CCPR1H and 2-bit latch match TMR2 concatenated with an internal 2-bit Q clock or 2 bits of the TMR2 prescaler, the CCP1 pin is cleared.

Maximum PWM resolution (bits) for a given PWM frequency:

$$= \frac{\log\left(\frac{F_{OSC}}{F_{PWM}}\right)}{\log(2)} \text{bits}$$

Note:	If the PWM duty cycle value is longer than the PWM period, the CCP1 pin will not be cleared.

13.5.3 SET-UP FOR PWM OPERATION

The following steps should be taken when configuring the CCP module for PWM operation:

1. Set the PWM period by writing to the PR2 register.
2. Set the PWM duty cycle by writing to the CCPR1L register and CCP1CON<5:4> bits.
3. Make the CCP1 pin an output by clearing the TRISC<2> bit.
4. Set the TMR2 prescale value and enable Timer2 by writing to T2CON.
5. Configure the CCP1 module for PWM operation.

TABLE 13-4: EXAMPLE PWM FREQUENCIES AND RESOLUTIONS AT 40 MHz

PWM Frequency	2.44 kHz	9.76 kHz	19.53 kHz	39.06 kHz	78.12 kHz	208.3 kHz
Timer Prescaler (1, 4, 16)	16	4	1	1	1	1
PR2 Value	0xFF	0xFF	0xFF	0x3F	0x1F	0x17
Maximum Resolution (bits)	10	10	10	8	7	5.5

TABLE 13-5: REGISTERS ASSOCIATED WITH PWM AND TIMER2

Name	Bit 7	Bit 6	Bit 5	Bit 4	Bit 3	Bit 2	Bit 1	Bit 0	Value on POR, BOR	Value on all other resets
INTCON	GIE/ GIEH	PEIE/ GIEL	TMR0IE	INT0IE	RBIE	TMR0IF	INT0IF	RBIF	0000 000x	0000 000u
PIR1	PSPIF (1)	ADIF	RCIF	TXIF	SSPIF	CCP1IF	TMR2IF	TMR1IF	0000 0000	0000 0000
PIE1	PSPIE (1)	ADIE	RCIE	TXIE	SSPIE	CCP1IE	TMR2IE	TMR1IE	0000 0000	0000 0000
IPR1	PSPIP (1)	ADIP	RCIP	TXIP	SSPIP	CCP1IP	TMR2IP	TMR1IP	0000 0000	0000 0000
TRISC	PORTC Data Direction Register								1111 1111	1111 1111
TMR2	Timer2 module's register								0000 0000	0000 0000
PR2	Timer2 module's period register								1111 1111	1111 1111
T2CON	—	TOUTPS3	TOUTPS2	TOUTPS1	TOUTPS0	TMR2ON	T2CKPS1	T2CKPS0	-000 0000	-000 0000
CCPR1L	Capture/Compare/PWM register1 (LSB)								xxxx xxxx	uuuu uuuu
CCPR1H	Capture/Compare/PWM register1 (MSB)								xxxx xxxx	uuuu uuuu
CCP1CON	—	—	DC1B1	DC1B0	CCP1M3	CCP1M2	CCP1M1	CCP1M0	--00 0000	--00 0000
CCPR2L	Capture/Compare/PWM register2 (LSB)								xxxx xxxx	uuuu uuuu
CCPR2H	Capture/Compare/PWM register2 (MSB)								xxxx xxxx	uuuu uuuu
CCP2CON	—	—	DC2B1	DC2B0	CCP2M3	CCP2M2	CCP2M1	CCP2M0	--00 0000	--00 0000

Legend: x = unknown, u = unchanged, — = unimplemented read as '0'.
Shaded cells are not used by PWM and Timer2.

Note 1: The PSPIF, PSPIE and PSPIP bits are reserved on the PIC18C2X2 devices. Always maintain these bits clear.

14.0 MASTER SYNCHRONOUS SERIAL PORT (MSSP) MODULE

14.1 Master SSP (MSSP) Module Overview

The Master Synchronous Serial Port (MSSP) module is a serial interface useful for communicating with other peripheral or microcontroller devices. These peripheral devices may be Serial EEPROMs, shift registers, display drivers, A/D converters, etc. The MSSP module can operate in one of two modes:

- Serial Peripheral Interface (SPI)
- Inter-Integrated Circuit (I^2C)
  - Full Master Mode
  - Slave mode (with general address call)

The I^2C interface supports the following modes in hardware:

- Master mode
- Multi-master mode
- Slave mode

14.2 Control Registers

The MSSP module has three associated registers. These include a status register and two control registers.

Register 14-1: SSPSTAT: MSSP Status Register

R/W-0	R/W-0	R-0	R-0	R-0	R-0	R-0	R-0
SMP	CKE	D/$\overline{A}$	P	S	R/$\overline{W}$	UA	BF
bit 7							bit 0

bit 7 **SMP:** Sample bit

SPI Master Mode

1 = Input data sampled at end of data output time
0 = Input data sampled at middle of data output time

SPI Slave Mode

SMP must be cleared when SPI is used in slave mode

In I^2C master or slave mode:

1= Slew rate control disabled for standard speed mode (100 kHz and 1 MHz)
0= Slew rate control enabled for high speed mode (400 kHz)

bit 6 **CKE:** SPI Clock Edge Select

CKP = 0

1 = Data transmitted on rising edge of SCK
0 = Data transmitted on falling edge of SCK

CKP = 1

1 = Data transmitted on falling edge of SCK
0 = Data transmitted on rising edge of SCK

bit 5 **D/$\overline{A}$:** Data/$\overline{\text{Address}}$ bit (I^2C mode only)

1 = Indicates that the last byte received or transmitted was data
0 = Indicates that the last byte received or transmitted was address

bit 4 **P:** Stop bit
(I^2C mode only. This bit is cleared when the MSSP module is disabled, SSPEN is cleared)

1 = Indicates that a stop bit has been detected last (this bit is '0' on RESET)
0 = Stop bit was not detected last

bit 3 **S:** Start bit
(I^2C mode only. This bit is cleared when the MSSP module is disabled, SSPEN is cleared)

1 = Indicates that a start bit has been detected last (this bit is '0' on RESET)
0 = Start bit was not detected last

bit 2 **R/$\overline{W}$:** Read/Write bit information (I^2C mode only)

This bit holds the R/W bit information following the last address match. This bit is only valid from the address match to the next start bit, stop bit, or not $\overline{\text{ACK}}$ bit.

In I^2C slave mode:

1 = Read
0 = Write

In I^2C master mode:

1 = Transmit is in progress
0 = Transmit is not in progress.
OR-ing this bit with SEN, RSEN, PEN, RCEN, or ACKEN will indicate if the MSSP is in IDLE mode.

bit 1 **UA:** Update Address (10-bit I^2C mode only)

1 = Indicates that the user needs to update the address in the SSPADD register
0 = Address does not need to be updated

bit 0 **BF:** Buffer Full Status bit

Receive (SPI and I^2C modes)

1 = Receive complete, SSPBUF is full
0 = Receive not complete, SSPBUF is empty

Transmit (I^2C mode only)

1 = Data Transmit in progress (does not include the $\overline{\text{ACK}}$ and stop bits), SSPBUF is full
0 = Data Transmit complete (does not include the $\overline{\text{ACK}}$ and stop bits), SSPBUF is empty

Legend:			
R = Readable bit	W = Writable bit	U = Unimplemented bit, read as '0'	
- n = Value at POR reset	'1' = Bit is set	'0' = Bit is cleared	x = Bit is unknown

Register 14-2: SSPCON1: MSSP Control Register1

R/W-0	R/W-0	R/W-0	R/W-0	R/W-0	R/W-0	R/W-0	R/W-0
WCOL	SSPOV	SSPEN	CKP	SSPM3	SSPM2	SSPM1	SSPM0
bit 7							bit 0

bit 7 **WCOL:** Write Collision Detect bit

Master Mode:
1 = A write to the SSPBUF register was attempted while the I^2C conditions were not valid for a transmission to be started
0 = No collision

Slave Mode:
1 = The SSPBUF register is written while it is still transmitting the previous word must be cleared in software)
0 = No collision

bit 6 **SSPOV:** Receive Overflow Indicator bit

In SPI mode:

1 = A new byte is received while the SSPBUF register is still holding the previous data. In case of overflow, the data in SSPSR is lost. Overflow can only occur in slave mode. In slave mode the user must read the SSPBUF, even if only transmitting data, to avoid setting overflow. In master mode the overflow bit is not set since each new reception (and transmission) is initiated by writing to the SSPBUF register. (Must be cleared in software)

0 = No overflow

In I^2C mode:

1 = A byte is received while the SSPBUF register is still holding the previous byte. SSPOV is a "don't care" in transmit mode. (Must be cleared in software)

0 = No overflow

bit 5 **SSPEN:** Synchronous Serial Port Enable bit
In both modes, when enabled, these pins must be properly configured as input or output.

In SPI mode:
1 = Enables serial port and configures SCK, SDO, SDI, and $\overline{SS}$ as the source of the serial port pins
0 = Disables serial port and configures these pins as I/O port pins

In I^2C mode:
1 = Enables the serial port and configures the SDA and SCL pins as the source of the serial port pins
0 = Disables serial port and configures these pins as I/O port pins

bit 4 **CKP:** Clock Polarity Select bit

In SPI mode:
1 = Idle state for clock is a high level
0 = Idle state for clock is a low level

In I^2C slave mode:
SCK release control

1 = Enable clock
0 = Holds clock low (clock stretch) (Used to ensure data setup time)

In I^2C master mode
Unused in this mode

bit 3 - 0 **SSPM3:SSPM0:** Synchronous Serial Port Mode Select bits

0000 = SPI master mode, clock = FOSC/4
0001 = SPI master mode, clock = FOSC/16
0010 = SPI master mode, clock = FOSC/64
0011 = SPI master mode, clock = TMR2 output/2
0100 = SPI slave mode, clock = SCK pin. $\overline{SS}$ pin control enabled.
0101 = SPI slave mode, clock = SCK pin. $\overline{SS}$ pin control disabled. $\overline{SS}$ can be used as I/O pin
0110 = I^2C slave mode, 7-bit address
0111 = I^2C slave mode, 10-bit address
1000 = I^2C master mode, clock = FOSC / (4 * (SSPADD+1))
1001 = Reserved
1010 = Reserved
1011 = I^2C firmware controlled Master mode (Slave idle)
1100 = Reserved
1101 = Reserved
1110 = I^2C slave mode, 7-bit address with start and stop bit interrupts enabled
1111 = I^2C slave mode, 10-bit address with start and stop bit interrupts enabled

Legend:			
R = Readable bit	W = Writable bit	U = Unimplemented bit, read as '0'	
- n = Value at POR reset	'1' = Bit is set	'0' = Bit is cleared	x = Bit is unknown

Register 14-3: SSPCON2: MSSP Control Register2

R/W-0	R/W-0	R/W-0	R/W-0	R/W-0	R/W-0	R/W-0	R/W-0
GCEN	ACKSTAT	ACKDT	ACKEN	RCEN	PEN	RSEN	SEN
bit 7							bit 0

bit 7 **GCEN:** General Call Enable bit (In I^2C slave mode only)
1 = Enable interrupt when a general call address (0000h) is received in the SSPSR
0 = General call address disabled

bit 6 **ACKSTAT:** Acknowledge Status bit (In I^2C master mode only)
In master transmit mode:
1 = Acknowledge was not received from slave
0 = Acknowledge was received from slave

bit 5 **ACKDT:** Acknowledge Data bit (In I^2C master mode only)
In master receive mode:
Value that will be transmitted when the user initiates an Acknowledge sequence at the end of a receive.
1 = Not Acknowledge
0 = Acknowledge

bit 4 **ACKEN:** Acknowledge Sequence Enable bit (In I^2C master mode only)
In master receive mode:
1 = Initiate Acknowledge sequence on SDA and SCL pins, and transmit ACKDT data bit. Automatically cleared by hardware.
0 = Acknowledge sequence idle

bit 3 **RCEN:** Receive Enable bit (In I^2C master mode only)
1 = Enables Receive mode for I^2C
0 = Receive idle

bit 2 **PEN:** Stop Condition Enable bit (In I^2C master mode only)
SCK release control
1 = Initiate Stop condition on SDA and SCL pins. Automatically cleared by hardware.
0 = Stop condition idle

bit 1 **RSEN:** Repeated Start Condition Enabled bit (In I^2C master mode only)
1 = Initiate Repeated Start condition on SDA and SCL pins. Automatically cleared by hardware.
0 = Repeated Start condition idle.

bit 0 **SEN:** Start Condition Enabled bit (In I^2C master mode only)
1 = Initiate Start condition on SDA and SCL pins. Automatically cleared by hardware.
0 = Start condition idle

Note: For bits ACKEN, RCEN, PEN, RSEN, SEN: If the I^2C module is not in the idle mode, this bit may not be set (no spooling) and the SSPBUF may not be written (or writes to the SSPBUF are disabled).

Legend:			
R = Readable bit	W = Writable bit	U = Unimplemented bit, read as ‘0’	
- n = Value at POR reset	’1’ = Bit is set	’0’ = Bit is cleared	x = Bit is unknown

14.2.1 SPI Mode

The SPI mode allows 8-bits of data to be synchronously transmitted and received simultaneously. All four modes of SPI are supported. To accomplish communication, typically three pins are used:

- Serial Data Out (SDO) - RC5/SDO
- Serial Data In (SDI) - RC4/SDI/SDA
- Serial Clock (SCK) - RC3/SCK/SCL/LVOIN

Additionally a fourth pin may be used when in a slave mode of operation:

- Slave Select ($\overline{SS}$) - RA5/$\overline{SS}$/AN4

14.2.1.1 OPERATION

When initializing the SPI, several options need to be specified. This is done by programming the appropriate control bits (SSPCON1<5:0>) and SSPSTAT<7:6>. These control bits allow the following to be specified:

- Master Mode (SCK is the clock output)
- Slave Mode (SCK is the clock input)
- Clock Polarity (Idle state of SCK)
- Data input sample phase (middle or end of data output time)
- Clock edge (output data on rising/falling edge of SCK)
- Clock Rate (Master mode only)
- Slave Select Mode (Slave mode only)

Figure 14-1 shows the block diagram of the MSSP module, when in SPI mode.

FIGURE 14-1: MSSP BLOCK DIAGRAM (SPI MODE)

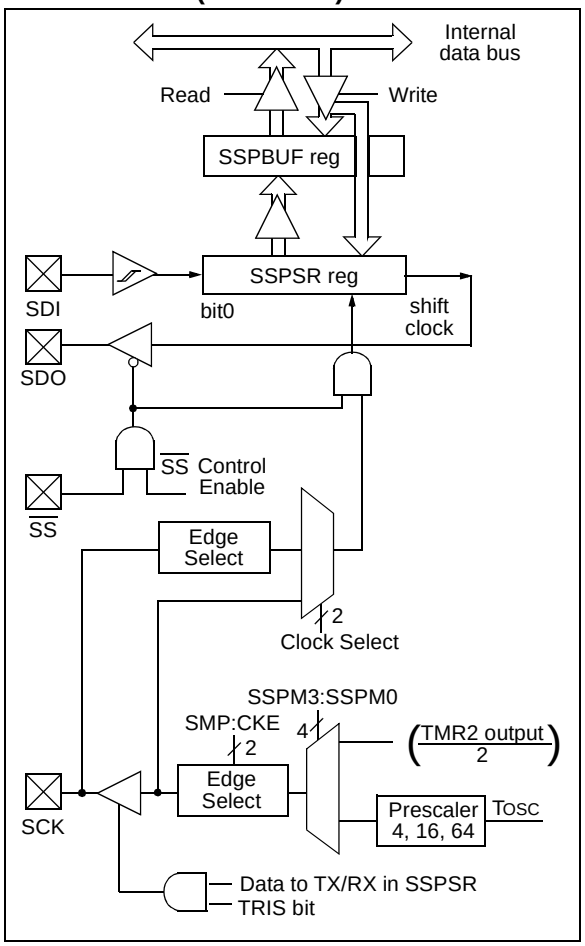

The MSSP consists of a transmit/receive Shift Register (SSPSR) and a buffer register (SSPBUF). The SSPSR shifts the data in and out of the device, MSb first. The SSPBUF holds the data that was written to the SSPSR, until the received data is ready. Once the 8 bits of data have been received, that byte is moved to the SSPBUF register. Then the buffer full detect bit, BF (SSPSTAT<0>), and the interrupt flag bit, SSPIF, are set. This double buffering of the received data (SSPBUF) allows the next byte to start reception before reading the data that was just received. Any write to the SSPBUF register during transmission/reception of data will be ignored, and the write collision detect bit, WCOL (SSPCON1<7>), will be set. User software must clear the WCOL bit so that it can be determined if the following write(s) to the SSPBUF register completed successfully.

When the application software is expecting to receive valid data, the SSPBUF should be read before the next byte of data to transfer is written to the SSPBUF. Buffer full bit, BF (SSPSTAT<0>), indicates when SSPBUF has been loaded with the received data (transmission is complete). When the SSPBUF is read, the BF bit is cleared. This data may be irrelevant if the SPI is only a transmitter. Generally the MSSP Interrupt is used to determine when the transmission/reception has completed. The SSPBUF must be read and/or written. If the interrupt method is not going to be used, then software polling can be done to ensure that a write collision does not occur. Example 14-1 shows the loading of the SSPBUF (SSPSR) for data transmission.

EXAMPLE 14-1: LOADING THE SSPBUF (SSPSR) REGISTER

```
LOOP BTFSS SSPSTAT, BF     ;Has data been received (transmit complete)?
     GOTO  LOOP            ;No
     MOVF  SSPBUF, W       ;WREG reg = contents of SSPBUF
     MOVWF RXDATA          ;Save in user RAM, if data is meaningful
     MOVF  TXDATA, W       ;W reg = contents of TXDATA
     MOVWF SSPBUF          ;New data to xmit
```

The SSPSR is not directly readable or writable, and can only be accessed by addressing the SSPBUF register. Additionally, the MSSP status register (SSPSTAT) indicates the various status conditions.

14.2.1.2 ENABLING SPI I/O

To enable the serial port, SSP Enable bit, SSPEN (SSPCON1<5>), must be set. To reset or reconfigure SPI mode, clear the SSPEN bit, re-initialize the SSPCON registers, and then set the SSPEN bit. This configures the SDI, SDO, SCK, and $\overline{SS}$ pins as serial port pins. For the pins to behave as the serial port function, some must have their data direction bits (in the TRIS register) appropriately programmed. That is:

- SDI is automatically controlled by the SPI module
- SDO must have TRISC<5> bit cleared
- SCK (Master mode) must have TRISC<3> bit cleared
- SCK (Slave mode) must have TRISC<3> bit set
- $\overline{SS}$ must have TRISC<4> bit set

Any serial port function that is not desired may be overridden by programming the corresponding data direction (TRIS) register to the opposite value.

14.2.1.3 TYPICAL CONNECTION

Figure 14-2 shows a typical connection between two microcontrollers. The master controller (Processor 1) initiates the data transfer by sending the SCK signal. Data is shifted out of both shift registers on their programmed clock edge, and latched on the opposite edge of the clock. Both processors should be programmed to same Clock Polarity (CKP), then both controllers would send and receive data at the same time. Whether the data is meaningful (or dummy data) depends on the application software. This leads to three scenarios for data transmission:

- Master sends data — Slave sends dummy data
- Master sends data — Slave sends data
- Master sends dummy data — Slave sends data

FIGURE 14-2: SPI MASTER/SLAVE CONNECTION

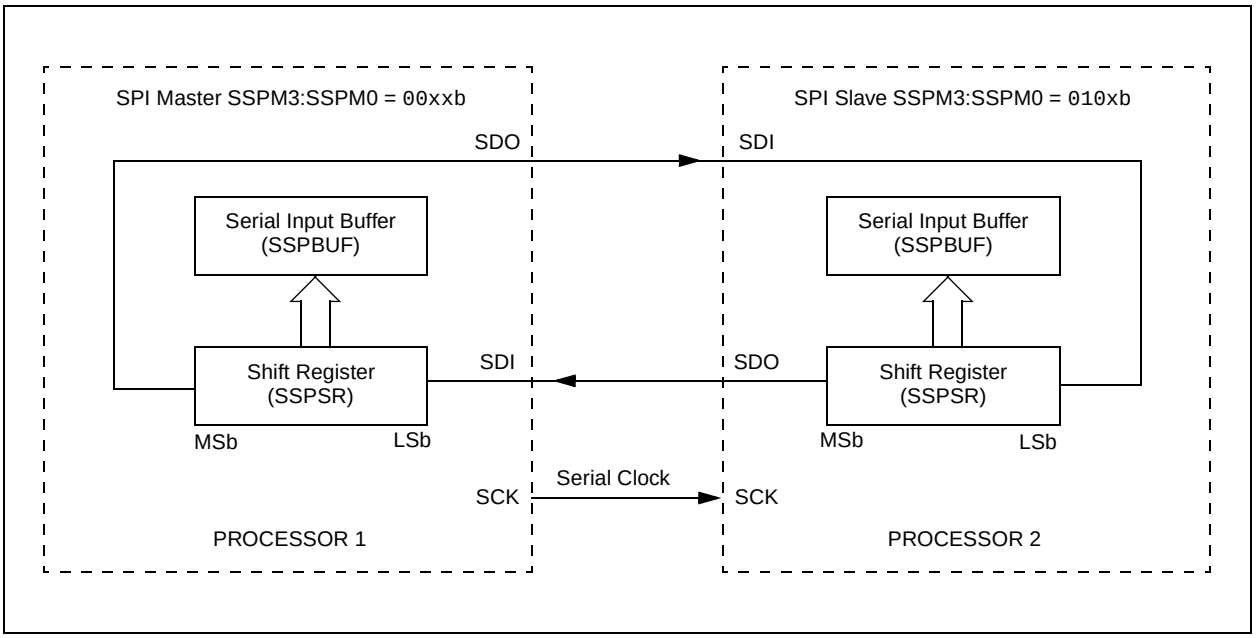

14.2.1.4 MASTER MODE

The master can initiate the data transfer at any time because it controls the SCK. The master determines when the slave (Processor 2, Figure 14-2) is to broadcast data by the software protocol.

In master mode the data is transmitted/received as soon as the SSPBUF register is written to. If the SPI is only going to receive, the SDO output could be disabled (programmed as an input). The SSPSR register will continue to shift in the signal present on the SDI pin at the programmed clock rate. As each byte is received, it will be loaded into the SSPBUF register as if a normal received byte (interrupts and status bits appropriately set). This could be useful in receiver applications as a “line activity monitor” mode.

The clock polarity is selected by appropriately programming the CKP bit (SSPCON1<4>). This then would give waveforms for SPI communication as shown in Figure 14-3, Figure 14-5, and Figure 14-6 where the MSB is transmitted first. In master mode, the SPI clock rate (bit rate) is user programmable to be one of the following:

- FOSC/4 (or TCY)
- FOSC/16 (or 4 • TCY)
- FOSC/64 (or 16 • TCY)
- Timer2 output/2

This allows a maximum data rate (at 40 MHz) of 10.00 Mbps.

Figure 14-3 Shows the waveforms for master mode. When the CKE bit is set, the SDO data is valid before there is a clock edge on SCK. The change of the input sample is shown based on the state of the SMP bit. The time when the SSPBUF is loaded with the received data is shown.

FIGURE 14-3: SPI MODE WAVEFORM (MASTER MODE)

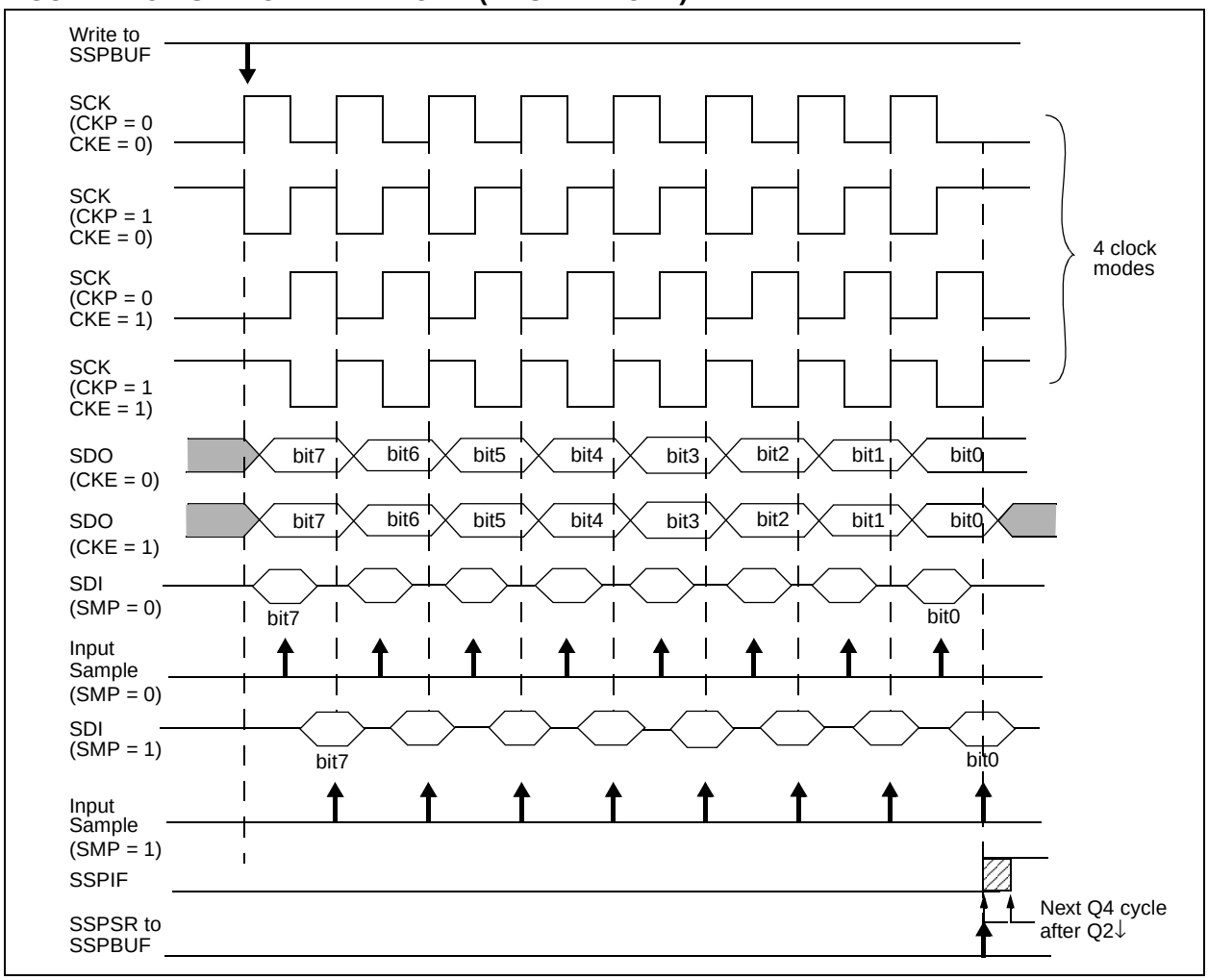

14.2.1.5 SLAVE MODE

In slave mode, the data is transmitted and received as the external clock pulses appear on SCK. When the last bit is latched, the SSPIF interrupt flag bit is set.

While in slave mode the external clock is supplied by the external clock source on the SCK pin. This external clock must meet the minimum high and low times as specified in the electrical specifications.

While in sleep mode, the slave can transmit/receive data. When a byte is receive the device will wake-up from sleep.

14.2.1.6 SLAVE SELECT SYNCHRONIZATION

The $\overline{SS}$ pin allows a synchronous slave mode. The SPI must be in slave mode with $\overline{SS}$ pin control enabled (SSPCON1<3:0> = 04h). The pin must not be driven low for the $\overline{SS}$ pin to function as an input. The Data Latch must be high. When the $\overline{SS}$ pin is low, transmission and reception are enabled and the SDO pin is driven. When the $\overline{SS}$ pin goes high, the SDO pin is no longer driven, even if in the middle of a transmitted byte, and becomes a floating output. External pull-up/ pull-down resistors may be desirable, depending on the application.

> **Note 1:** When the SPI is in Slave Mode with $\overline{SS}$ pin control enabled, (SSPCON<3:0> = `0100`) the SPI module will reset if the $\overline{SS}$ pin is set to V_{DD}.
>
> **Note 2:** If the SPI is used in Slave Mode with CKE set, then the $\overline{SS}$ pin control must be enabled.

When the SPI module resets, the bit counter is forced to 0. This can be done by either by forcing the $\overline{SS}$ pin to a high level or clearing the SSPEN bit.

To emulate two-wire communication, the SDO pin can be connected to the SDI pin. When the SPI needs to operate as a receiver the SDO pin can be configured as an input. This disables transmissions from the SDO. The SDI can always be left as an input (SDI function) since it cannot create a bus conflict.

FIGURE 14-4: SLAVE SYNCHRONIZATION WAVEFORM

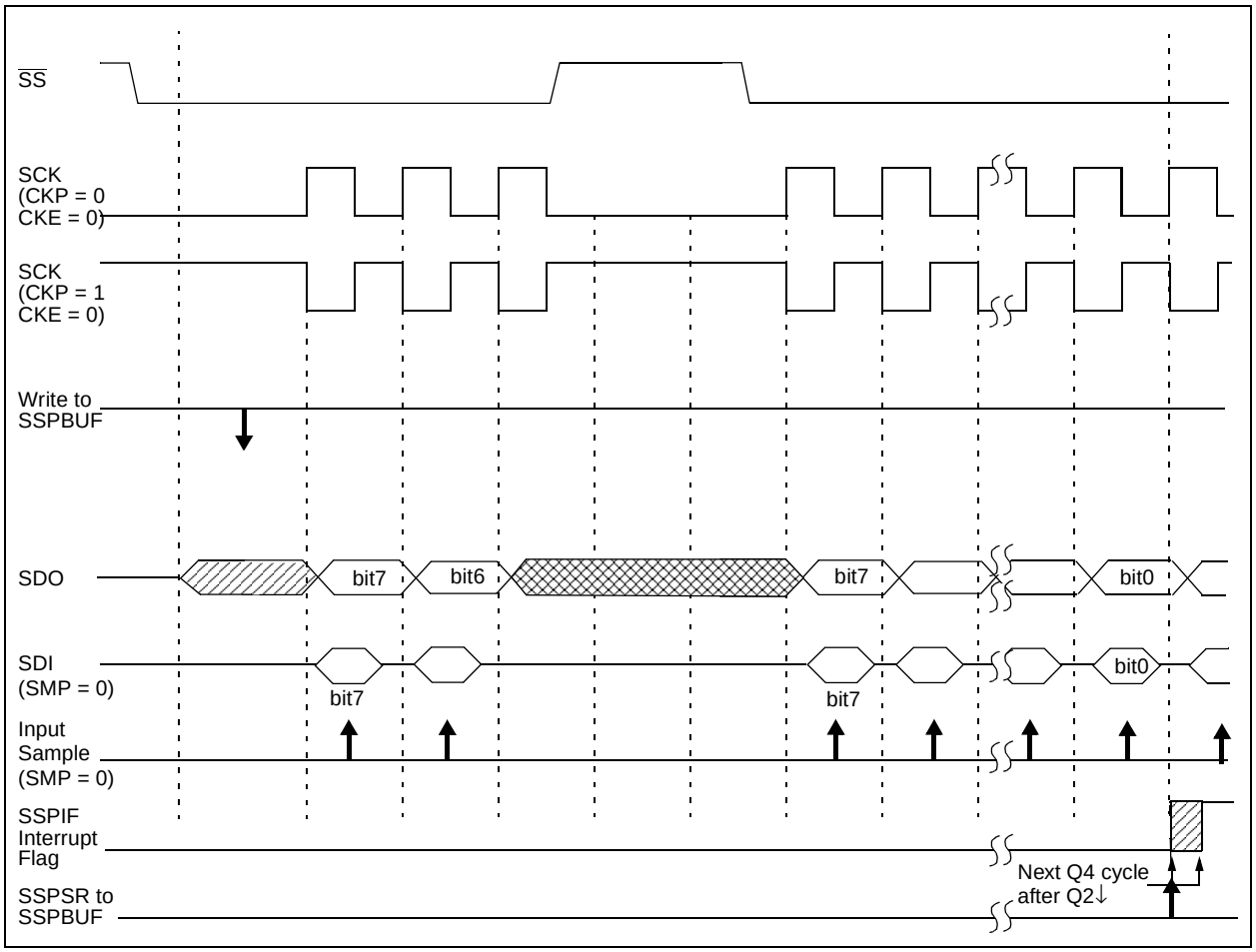

FIGURE 14-5: SPI MODE WAVEFORM (SLAVE MODE WITH CKE = 0)

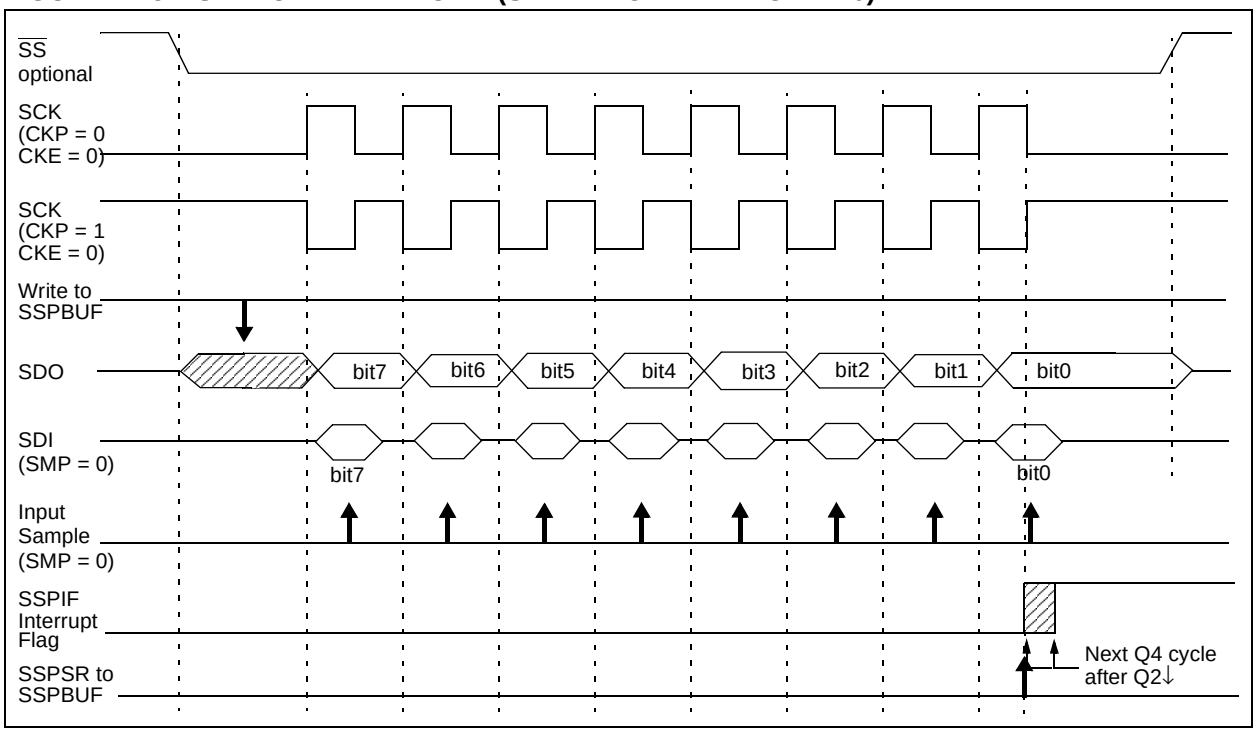

FIGURE 14-6: SPI MODE WAVEFORM (SLAVE MODE WITH CKE = 1)

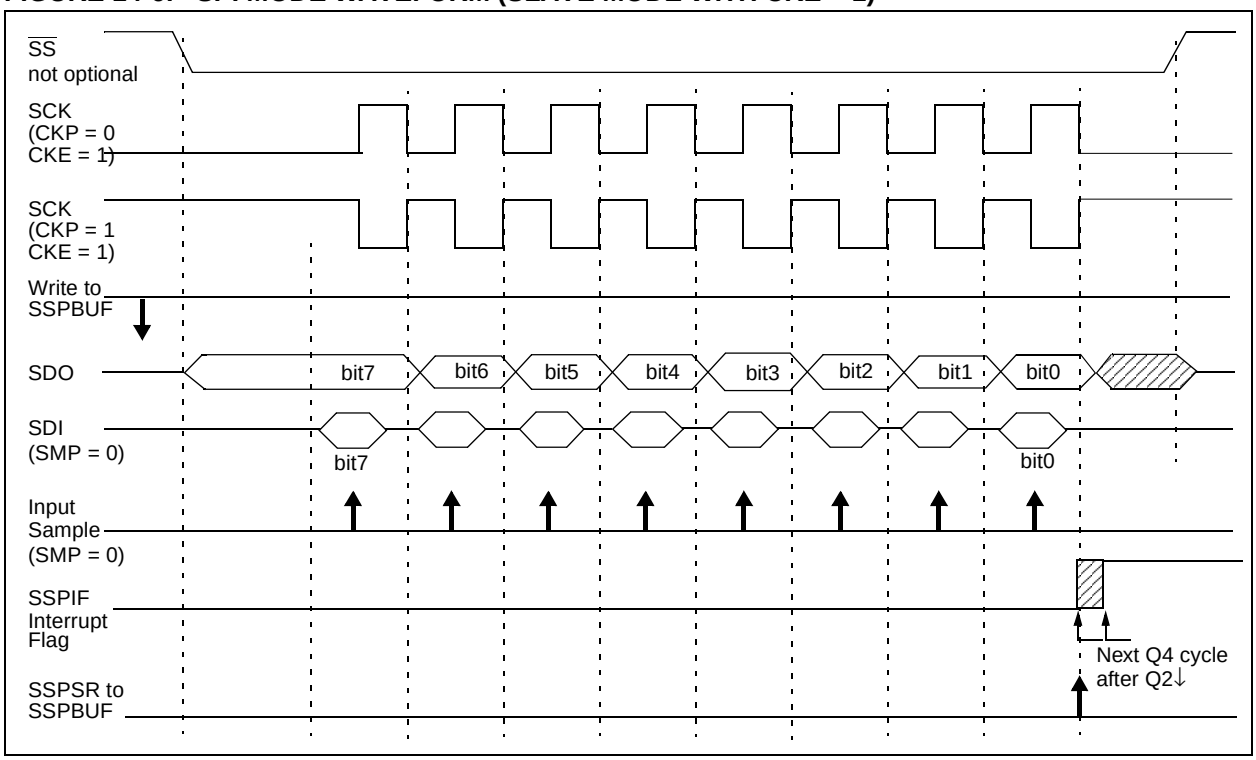

14.2.1.7 SLEEP OPERATION

In master mode all module clocks are halted, and the transmission/reception will remain in that state until the device wakes from sleep. After the device returns to normal mode, the module will continue to transmit/receive data.

In slave mode, the SPI transmit/receive shift register operates asynchronously to the device. This allows the device to be placed in sleep mode, and data to be shifted into the SPI transmit/receive shift register. When all 8-bits have been received, the MSSP interrupt flag bit will be set and if enabled will wake the device from sleep.

14.2.1.8 EFFECTS OF A RESET

A reset disables the MSSP module and terminates the current transfer.

14.2.1.9 BUS MODE COMPATIBILITY

Table 14-1 shows the compatibility between the standard SPI modes and the states the the CKP and CKE control bits.

TABLE 14-1: SPI BUS MODES

Standard SPI Mode Terminology	Control Bits State	
	CKP	CKE
0, 0	0	1
0, 1	0	0
1, 0	1	1
1, 1	1	0

There is also a SMP bit which controls when the data is sampled.

TABLE 14-2: REGISTERS ASSOCIATED WITH SPI OPERATION

Name	Bit 7	Bit 6	Bit 5	Bit 4	Bit 3	Bit 2	Bit 1	Bit 0	Value on POR, BOR	Value on all other resets
INTCON	GIE/ GIEH	PEIE/ GIEL	TMR0IE	INT0IE	RBIE	TMR0IF	INT0IF	RBIF	0000 000x	0000 000u
PIR1	PSPIF (1)	ADIF	RCIF	TXIF	SSPIF	CCP1IF	TMR2IF	TMR1IF	0000 0000	0000 0000
PIE1	PSPIE (1)	ADIE	RCIE	TXIE	SSPIE	CCP1IE	TMR2IE	TMR1IE	0000 0000	0000 0000
IPR1	PSPIP (1)	ADIP	RCIP	TXIP	SSPIP	CCP1IP	TMR2IP	TMR1IP	0000 0000	0000 0000
TRISC	PORTC Data Direction Register								1111 1111	1111 1111
SSPBUF	Synchronous Serial Port Receive Buffer/Transmit Register								xxxx xxxx	uuuu uuuu
SSPCON	WCOL	SSPOV	SSPEN	CKP	SSPM3	SSPM2	SSPM1	SSPM0	0000 0000	0000 0000
TRISA	—	PORTA Data Direction Register							--11 1111	--11 1111
SSPSTAT	SMP	CKE	D/$\overline{A}$	P	S	R/$\overline{W}$	UA	BF	0000 0000	0000 0000

Legend: x = unknown, u = unchanged, - = unimplemented read as '0'.
Shaded cells are not used by the MSSP in SPI mode.

Note 1: The PSPIF, PSPIE and PSPIP bits are reserved on the PIC18C2X2 devices. Always maintain these bits clear.

14.3 MSSP I^{2}C Operation

The MSSP module in I^{2}C mode fully implements all master and slave functions (including general call support) and provides interrupts on start and stop bits in hardware to determine a free bus (multi-master function). The MSSP module implements the standard mode specifications, as well as 7-bit and 10-bit addressing.

Two pins are used for data transfer. These are the RC3/SCK/SCL pin, which is the clock (SCL), and the RC4/SDI/SDA pin, which is the data (SDA). The user must configure these pins as inputs or outputs through the TRISC<4:3> bits.

The MSSP module functions are enabled by setting MSSP Enable bit SSPEN (SSPCON<5>).

FIGURE 14-7: MSSP BLOCK DIAGRAM (I^{2}C MODE)

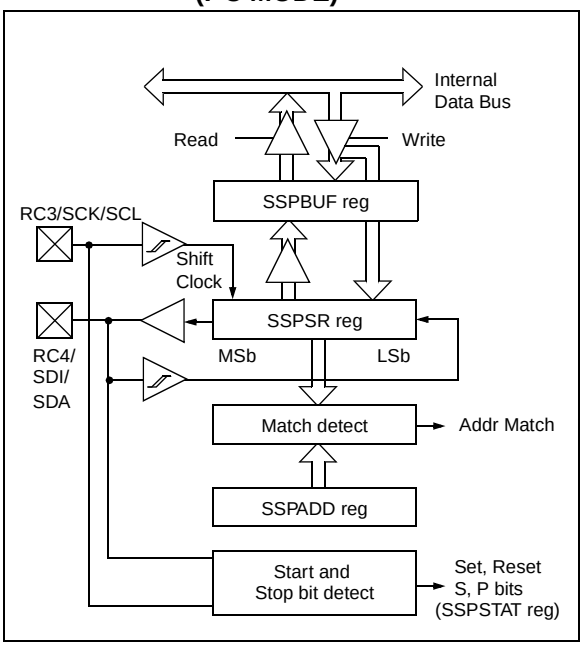

The MSSP module has six registers for I^{2}C operation. These are the:

- MSSP Control Register1 (SSPCON1)
- MSSP Control Register2 (SSPCON2)
- MSSP Status Register (SSPSTAT)
- Serial Receive/Transmit Buffer (SSPBUF)
- MSSP Shift Register (SSPSR) - Not directly accessible
- MSSP Address Register (SSPADD)

The SSPCON1 register allows control of the I^2C operation. Four mode selection bits (SSPCON<3:0>) allow one of the following I^2C modes to be selected:

- I^2C Master mode, clock = OSC/4 (SSPADD +1)
- I^2C Slave mode (7-bit address)
- I^2C Slave mode (10-bit address)
- I^2C Slave mode (7-bit address), with start and stop bit interrupts enabled
- I^2C Slave mode (10-bit address), with start and stop bit interrupts enabled
- I^2C Firmware controlled master operation, slave is idle

Selection of any I^2C mode, with the SSPEN bit set, forces the SCL and SDA pins to be open drain, provided these pins are programmed to inputs by setting the appropriate TRISC bits.

14.3.1 SLAVE MODE

In slave mode, the SCL and SDA pins must be configured as inputs (TRISC<4:3> set). The MSSP module will override the input state with the output data when required (slave-transmitter).

When an address is matched or the data transfer after an address match is received, the hardware automatically will generate the acknowledge ($\overline{ACK}$) pulse and load the SSPBUF register with the received value currently in the SSPSR register.

There are certain conditions that will cause the MSSP module not to give this $\overline{ACK}$ pulse. These are if either (or both):

a) The buffer full bit BF (SSPSTAT<0>) was set before the transfer was received.

b) The overflow bit SSPOV (SSPCON<6>) was set before the transfer was received.

In this case, the SSPSR register value is not loaded into the SSPBUF, but bit SSPIF (PIR1<3>) is set. The BF bit is cleared by reading the SSPBUF register, while bit SSPOV is cleared through software.

The SCL clock input must have a minimum high and low for proper operation. The high and low times of the I^2C specification, as well as the requirement of the MSSP module, is shown in timing parameter #100 and parameter #101.

14.3.1.1 ADDRESSING

Once the MSSP module has been enabled, it waits for a START condition to occur. Following the START condition, the 8-bits are shifted into the SSPSR register. All incoming bits are sampled with the rising edge of the clock (SCL) line. The value of register SSPSR<7:1> is compared to the value of the SSPADD register. The address is compared on the falling edge of the eighth clock (SCL) pulse. If the addresses match, and the BF and SSPOV bits are clear, the following events occur:

a) The SSPSR register value is loaded into the SSPBUF register.

b) The buffer full bit BF is set.

c) An $\overline{ACK}$ pulse is generated.

d) MSSP interrupt flag bit SSPIF (PIR1<3>) is set (interrupt is generated if enabled) on the falling edge of the ninth SCL pulse.

In 10-bit address mode, two address bytes need to be received by the slave. The five Most Significant bits (MSbs) of the first address byte specify if this is a 10-bit address. Bit R/$\overline{W}$ (SSPSTAT<2>) must specify a write so the slave device will receive the second address byte. For a 10-bit address, the first byte would equal ‘1111 0 A9 A8 0’, where A9 and A8 are the two MSbs of the address. The sequence of events for 10-bit address is as follows with steps 7- 9 for slave-transmitter:

1. Receive first (high) byte of Address (bits SSPIF, BF and bit UA (SSPSTAT<1>) are set).
2. Update the SSPADD register with second (low) byte of Address (clears bit UA and releases the SCL line).
3. Read the SSPBUF register (clears bit BF) and clear flag bit SSPIF.
4. Receive second (low) byte of Address (bits SSPIF, BF, and UA are set).
5. Update the SSPADD register with the first (high) byte of Address. If match releases SCL line, this will clear bit UA.
6. Read the SSPBUF register (clears bit BF) and clear flag bit SSPIF.
7. Receive repeated START condition.
8. Receive first (high) byte of Address (bits SSPIF and BF are set).
9. Read the SSPBUF register (clears bit BF) and clear flag bit SSPIF.

14.3.1.2 RECEPTION

When the R/$\overline{W}$ bit of the address byte is clear and an address match occurs, the R/$\overline{W}$ bit of the SSPSTAT register is cleared. The received address is loaded into the SSPBUF register.

When the address byte overflow condition exists, then no acknowledge ($\overline{ACK}$) pulse is given. An overflow condition is defined as either bit BF (SSPSTAT<0>) is set or bit SSPOV (SSPCON<6>) is set.

An MSSP interrupt is generated for each data transfer byte. Flag bit SSPIF (PIR1<3>) must be cleared in software. The SSPSTAT register is used to determine the status of the byte.

14.3.1.3 TRANSMISSION

When the R/$\overline{W}$ bit of the incoming address byte is set and an address match occurs, the R/$\overline{W}$ bit of the SSPSTAT register is set. The received address is loaded into the SSPBUF register. The $\overline{ACK}$ pulse will be sent on the ninth bit and pin RC3/SCK/SCL is held low. The transmit data must be loaded into the SSPBUF register, which also loads the SSPSR register. Then pin RC3/SCK/SCL should be enabled by setting bit CKP (SSPCON<4>). The master must monitor the SCL pin prior to asserting another clock pulse. The slave devices may be holding off the master by stretching the clock. The eight data bits are shifted out on the falling edge of the SCL input. This ensures that the SDA signal is valid during the SCL high time (Figure 14-9).

An MSSP interrupt is generated for each data transfer byte. The SSPIF bit must be cleared in software and the SSPSTAT register is used to determine the status of the byte. The SSPIF bit is set on the falling edge of the ninth clock pulse.

As a slave-transmitter, the $\overline{ACK}$ pulse from the master-receiver is latched on the rising edge of the ninth SCL input pulse. If the SDA line is high (not $\overline{ACK}$), then the data transfer is complete. When the $\overline{ACK}$ is latched by the slave, the slave logic is reset (resets SSPSTAT register) and the slave monitors for another occurrence of the START bit. If the SDA line was low ($\overline{ACK}$), the transmit data must be loaded into the SSPBUF register, which also loads the SSPSR register. Pin RC3/SCK/SCL should be enabled by setting bit CKP.

FIGURE 14-8: I²C SLAVE MODE WAVEFORMS FOR RECEPTION (7-BIT ADDRESS)

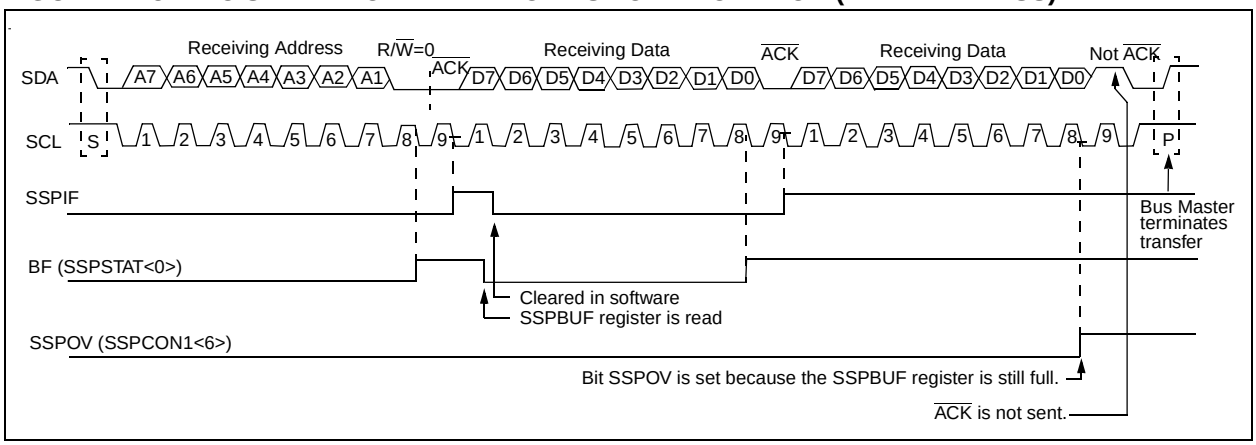

FIGURE 14-9: I²C SLAVE MODE WAVEFORMS FOR TRANSMISSION (7-BIT ADDRESS)

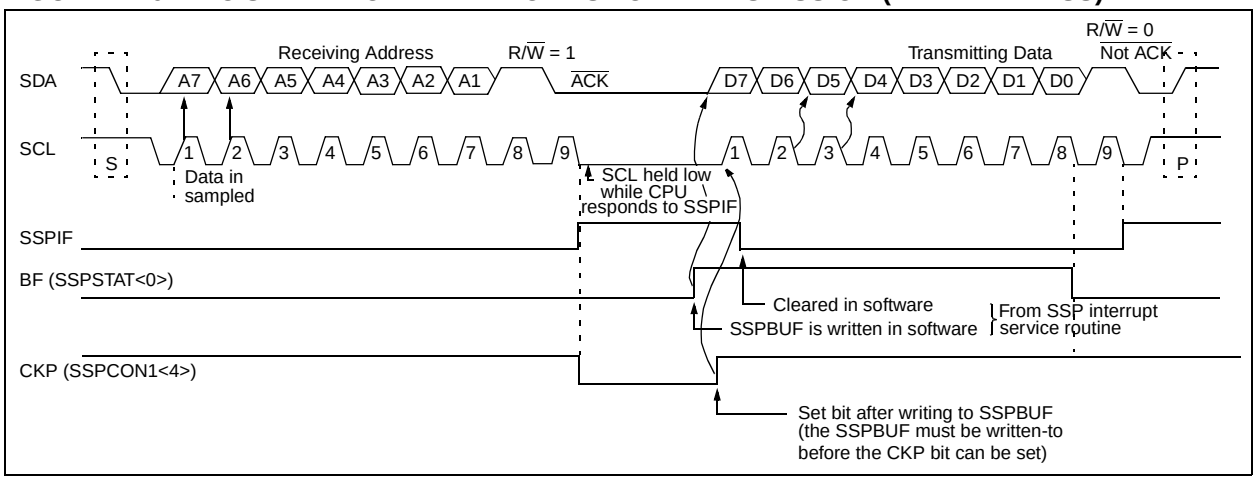

FIGURE 14-10: I²C SLAVE MODE WAVEFORM (TRANSMISSION 10-BIT ADDRESS)

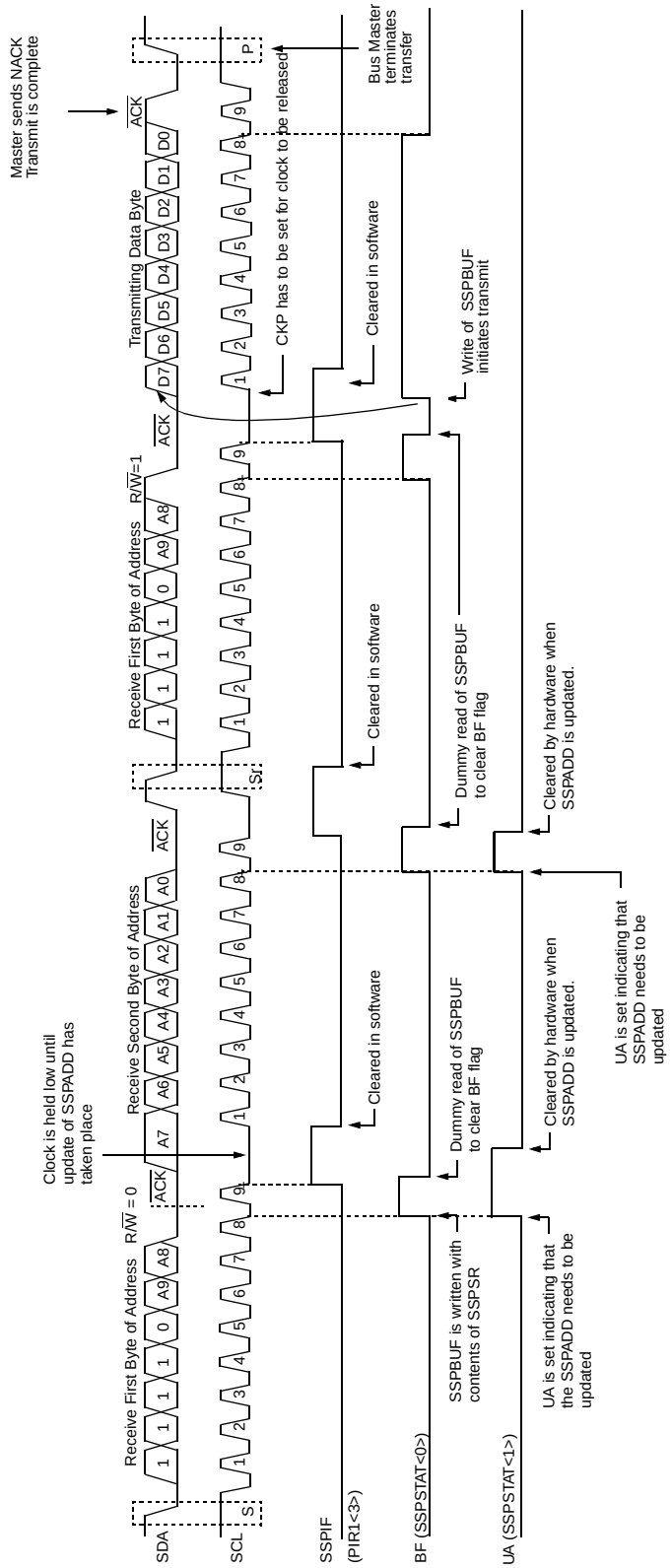

FIGURE 14-11: I²C SLAVE MODE WAVEFORM (RECEPTION 10-BIT ADDRESS)

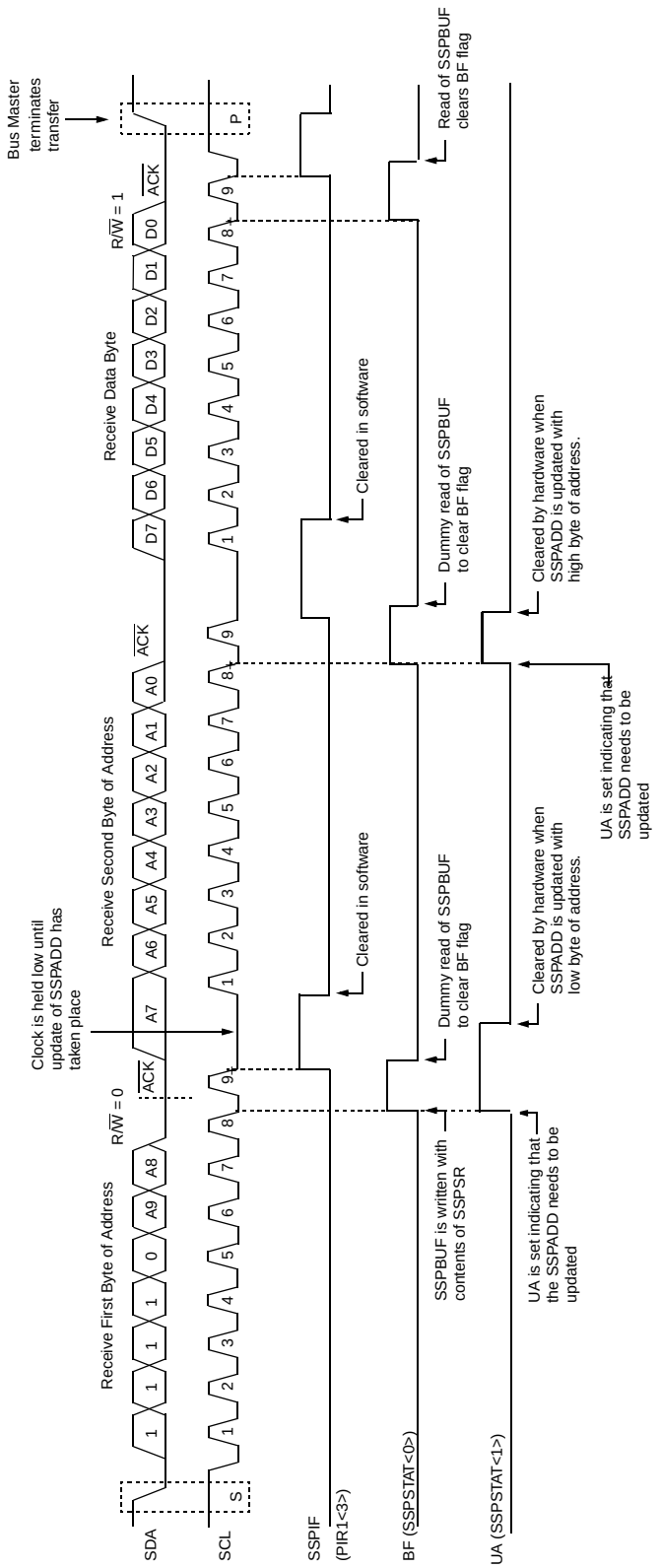

14.3.2 GENERAL CALL ADDRESS SUPPORT

The addressing procedure for the I^{2}C bus is such that the first byte after the START condition usually determines which device will be the slave addressed by the master. The exception is the general call address which can address all devices. When this address is used, all devices should, in theory, respond with an acknowledge.

The general call address is one of eight addresses reserved for specific purposes by the I^{2}C protocol. It consists of all 0's with R/$\overline{W}$ = 0.

The general call address is recognized when the General Call Enable bit (GCEN) is enabled (SSPCON2<7> set). Following a start-bit detect, 8-bits are shifted into the SSPSR and the address is compared against the SSPADD. It is also compared to the general call address and fixed in hardware.

If the general call address matches, the SSPSR is transferred to the SSPBUF, the BF flag bit is set (eight bit), and on the falling edge of the ninth bit ($\overline{ACK}$ bit), the SSPIF interrupt flag bit is set.

When the interrupt is serviced, the source for the interrupt can be checked by reading the contents of the SSPBUF. The value can be used to determine if the address was device specific or a general call address.

In 10-bit mode, the SSPADD is required to be updated for the second half of the address to match, and the UA bit is set (SSPSTAT<1>). If the general call address is sampled when the GCEN bit is set, while the slave is configured in 10-bit address mode, then the second half of the address is not necessary, the UA bit will not be set, and the slave will begin receiving data after the acknowledge (Figure 14-12).

FIGURE 14-12: SLAVE MODE GENERAL CALL ADDRESS SEQUENCE (7 OR 10-BIT ADDRESS MODE)

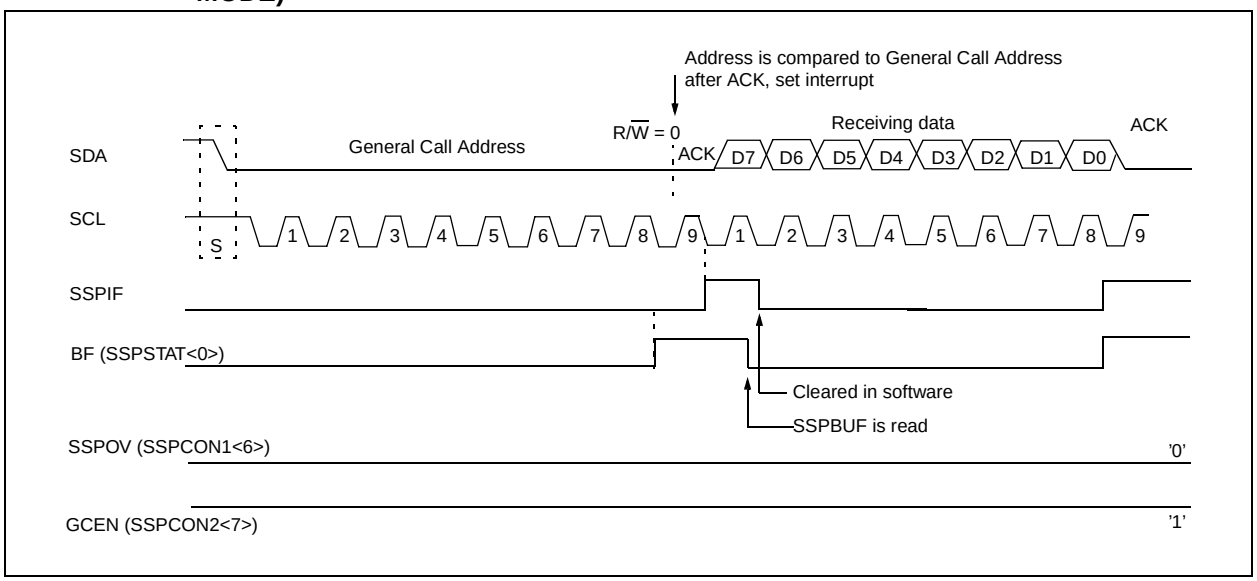

14.3.3 MASTER MODE

Master mode of operation is supported by interrupt generation on the detection of the START and STOP conditions. The STOP (P) and START (S) bits are cleared from a reset or when the MSSP module is disabled. Control of the I^{2}C bus may be taken when the P bit is set or the bus is idle with both the S and P bits clear.

In master mode, the SCL and SDA lines are manipulated by the MSSP hardware.

The following events will cause SSP Interrupt Flag bit, SSPIF, to be set (SSP Interrupt if enabled):

- START condition
- STOP condition
- Data transfer byte transmitted/received
- Acknowledge Transmit
- Repeated Start

14.3.4 I^{2}C MASTER MODE SUPPORT

Master Mode is enabled by setting and clearing the appropriate SSPM bits in SSPCON1 and by setting the SSPEN bit. Once master mode is enabled, the user has six options.

1. Assert a start condition on SDA and SCL.
2. Assert a Repeated Start condition on SDA and SCL.
3. Write to the SSPBUF register initiating transmission of data/address.
4. Generate a stop Condition on SDA and SCL.
5. Configure the I^{2}C port to receive data.
6. Generate an acknowledge condition at the end of a received byte of data.

Note: The MSSP Module, when configured in I^{2}C Master Mode, does not allow queueing of events. For instance, the user is not allowed to initiate a start condition and immediately write the SSPBUF register to imitate transmission before the START condition is complete. In this case, the SSPBUF will not be written to and the WCOL bit will be set, indicating that a write to the SSPBUF did not occur.

FIGURE 14-13: MSSP BLOCK DIAGRAM (I^{2}C MASTER MODE)

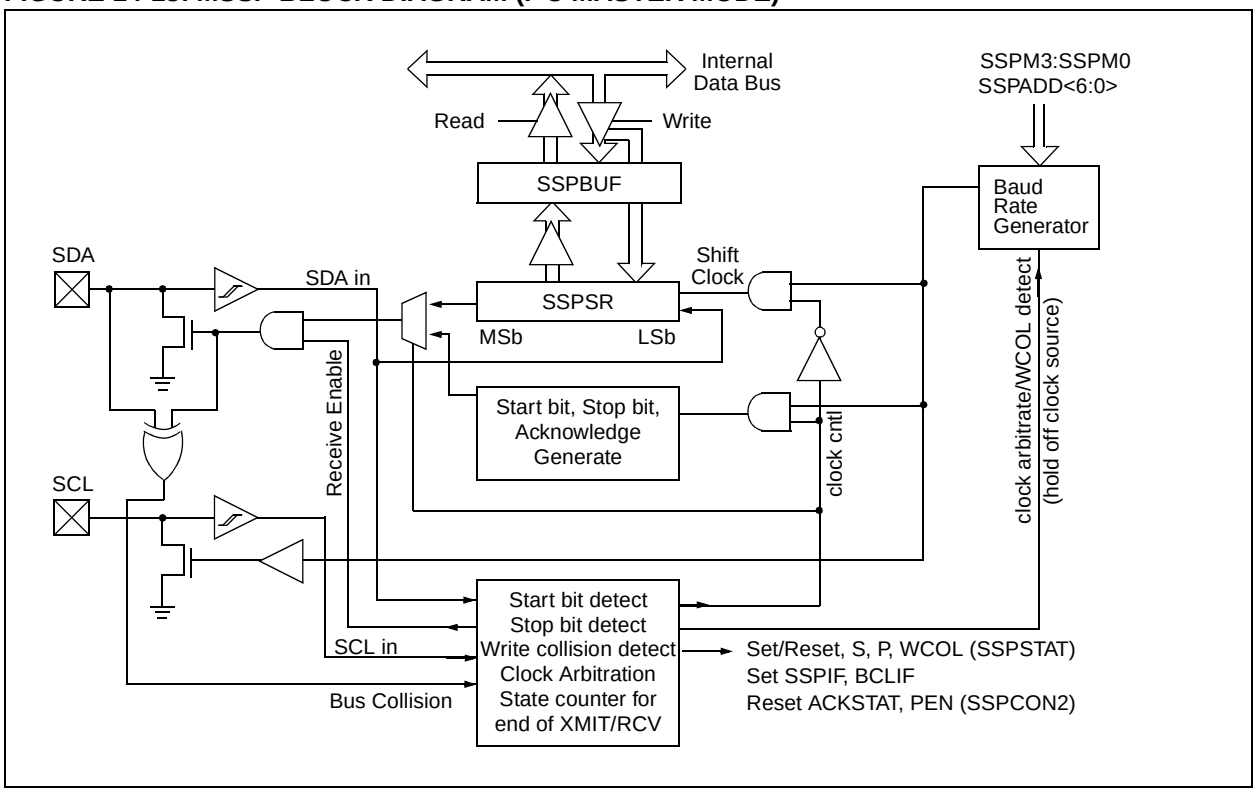

14.3.4.1 I^{2}C MASTER MODE OPERATION

The master device generates all of the serial clock pulses and the START and STOP conditions. A transfer is ended with a STOP condition or with a repeated START condition. Since the repeated START condition is also the beginning of the next serial transfer, the I^{2}C bus will not be released.

In Master transmitter mode serial data is output through SDA, while SCL outputs the serial clock. The first byte transmitted contains the slave address of the receiving device (7 bits) and the Read/Write (R/$\overline{W}$) bit. In this case, the R/$\overline{W}$ bit will be logic '0'. Serial data is transmitted 8 bits at a time. After each byte is transmitted, an acknowledge bit is received. START and STOP conditions are output to indicate the beginning and the end of a serial transfer.

In Master receive mode, the first byte transmitted contains the slave address of the transmitting device (7 bits) and the R/$\overline{W}$ bit. In this case, the R/$\overline{W}$ bit will be logic '1'. Thus, the first byte transmitted is a 7-bit slave address followed by a '1' to indicate receive bit. Serial data is received via SDA, while SCL outputs the serial clock. Serial data is received 8 bits at a time. After each byte is received, an acknowledge bit is transmitted. START and STOP conditions indicate the beginning and end of transmission.

The baud rate generator used for the SPI mode operation is now used to set the SCL clock frequency for either 100 kHz, 400 kHz or 1 MHz I^{2}C operation. The baud rate generator reload value is contained in the lower 7 bits of the SSPADD register. The baud rate generator will automatically begin counting on a write to the SSPBUF. Once the given operation is complete, (i.e. transmission of the last data bit is followed by ACK), the internal clock will automatically stop counting and the SCL pin will remain in its last state.

A typical transmit sequence would go as follows:

a) The user generates a Start Condition by setting the START enable bit SEN (SSPCON2<0>).
b) SSPIF is set. The MSSP module will wait the required start time before any other operation takes place.
c) The user loads the SSPBUF with the address to transmit.
d) Address is shifted out the SDA pin until all 8 bits are transmitted.
e) The MSSP Module shifts in the ACK bit from the slave device and writes its value into the SSPCON2 register (SSPCON2<6>).
f) The MSSP module generates an interrupt at the end of the ninth clock cycle by setting the SSPIF bit.
g) The user loads the SSPBUF with eight bits of data.
h) DATA is shifted out the SDA pin until all 8 bits are transmitted.
i) The MSSP Module shifts in the ACK bit from the slave device and writes its value into the SSPCON2 register (SSPCON2<6>).
j) The MSSP module generates an interrupt at the end of the ninth clock cycle by setting the SSPIF bit.
k) The user generates a STOP condition by setting the STOP enable bit PEN (SSPCON2<2>).
l) Interrupt is generated once the stop condition is complete.

14.3.5 BAUD RATE GENERATOR

In I^2C master mode, the reload value for the BRG is located in the lower 7 bits of the SSPADD register (Figure 14-14). When the BRG is loaded with this value, the BRG counts down to 0 and stops until another reload has taken place. The BRG count is decremented twice per instruction cycle (TCY) on the Q2 and Q4 clocks. In I^2C master mode, the BRG is reloaded automatically. If Clock Arbitration is taking place for instance, the BRG will be reloaded when the SCL pin is sampled high (Figure 14-15).

FIGURE 14-14: BAUD RATE GENERATOR BLOCK DIAGRAM

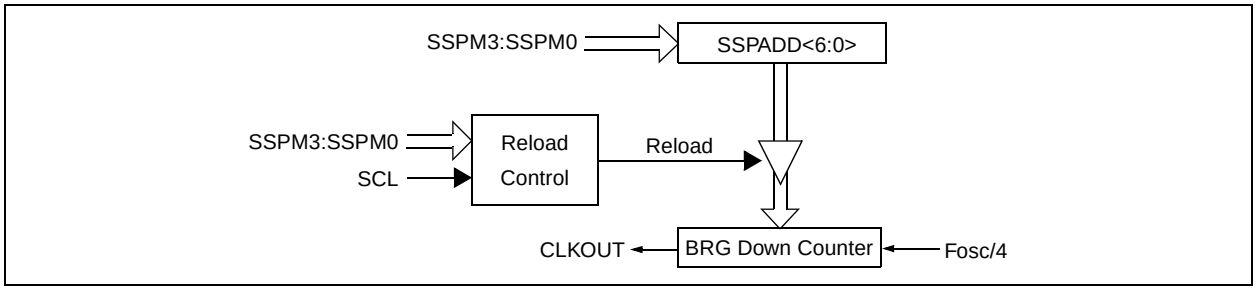

FIGURE 14-15: BAUD RATE GENERATOR TIMING WITH CLOCK ARBITRATION

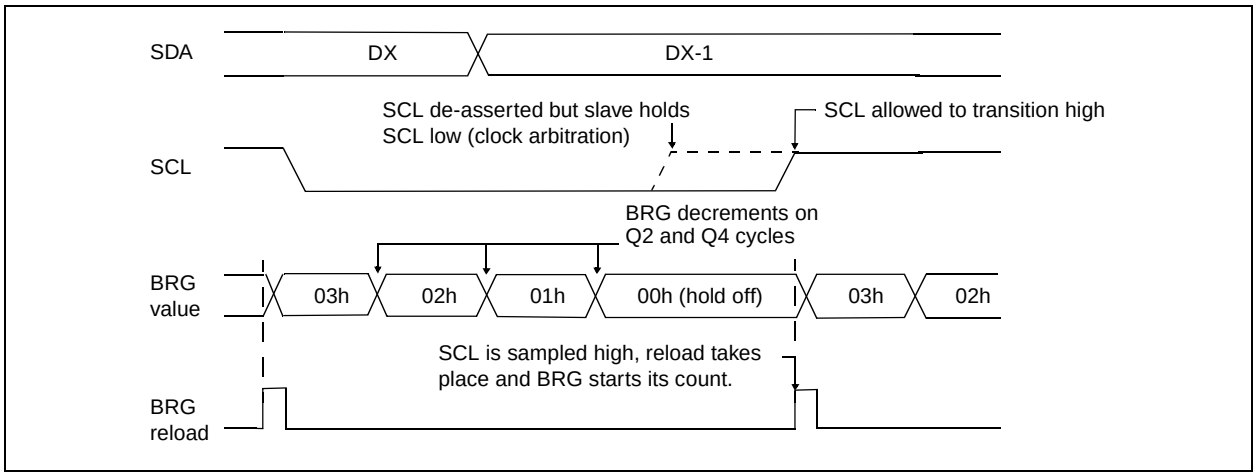

14.3.6 I²C MASTER MODE START CONDITION TIMING

To initiate a START condition, the user sets the start condition enable bit SEN (SSPCON2<0>). If the SDA and SCL pins are sampled high, the baud rate generator is re-loaded with the contents of SSPADD<6:0> and starts its count. If SCL and SDA are both sampled high when the baud rate generator times out (TBRG), the SDA pin is driven low. The action of the SDA being driven low, while SCL is high, is the START condition, and causes the S bit (SSPSTAT<3>) to be set. Following this, the baud rate generator is reloaded with the contents of SSPADD<6:0> and resumes its count. When the baud rate generator times out (TBRG), the SEN bit (SSPCON2<0>) will be automatically cleared by hardware, the baud rate generator is suspended leaving the SDA line held low and the START condition is complete.

Note:	If at the beginning of the START condition, the SDA and SCL pins are already sampled low, or if during the START condition the SCL line is sampled low before the SDA line is driven low, a bus collision occurs, the Bus Collision Interrupt Flag BCLIF is set, the START condition is aborted, and the I²C module is reset into its IDLE state.

14.3.6.1 WCOL STATUS FLAG

If the user writes the SSPBUF when an START sequence is in progress, the WCOL is set and the contents of the buffer are unchanged (the write doesn't occur).

Note:	Because queueing of events is not allowed, writing to the lower 5 bits of SSPCON2 is disabled until the START condition is complete.

FIGURE 14-16: FIRST START BIT TIMING

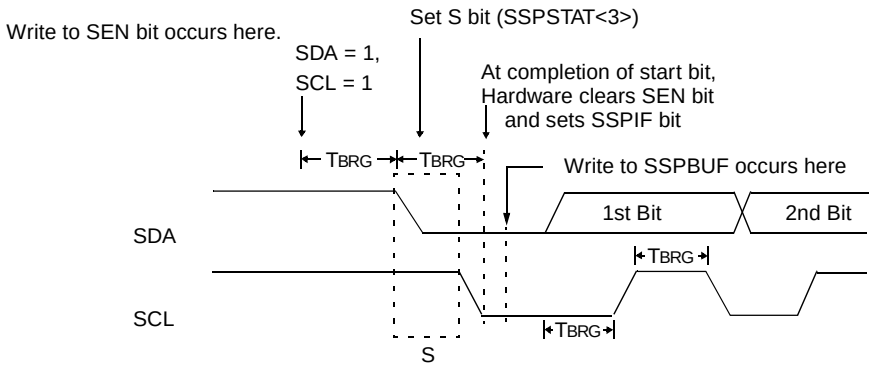

14.3.7 I²C MASTER MODE REPEATED START CONDITION TIMING

A Repeated Start condition occurs when the RSEN bit (SSPCON2<1>) is programmed high and the I²C logic module is in the idle state. When the RSEN bit is set, the SCL pin is asserted low. When the SCL pin is sampled low, the baud rate generator is loaded with the contents of SSPADD<5:0> and begins counting. The SDA pin is released (brought high) for one baud rate generator count (T_{BRG}). When the baud rate generator times out, if SDA is sampled high, the SCL pin will be de-asserted (brought high). When SCL is sampled high, the baud rate generator is re-loaded with the contents of SSPADD<6:0> and begins counting. SDA and SCL must be sampled high for one T_{BRG}. This action is then followed by assertion of the SDA pin (SDA = 0) for one T_{BRG}, while SCL is high. Following this, the RSEN bit (SSPCON2<1>) will be automatically cleared and the baud rate generator will not be reloaded, leaving the SDA pin held low. As soon as a start condition is detected on the SDA and SCL pins, the S bit (SSPSTAT<3>) will be set. The SSPIF bit will not be set until the baud rate generator has timed-out.

> **Note 1:** If RSEN is programmed while any other event is in progress, it will not take effect.
>
> **Note 2:** A bus collision during the Repeated Start condition occurs if:
>
> - SDA is sampled low when SCL goes from low to high.
> - SCL goes low before SDA is asserted low. This may indicate that another master is attempting to transmit a data "1".

Immediately following the SSPIF bit getting set, the user may write the SSPBUF with the 7-bit address in 7-bit mode, or the default first address in 10-bit mode. After the first eight bits are transmitted and an ACK is received, the user may then transmit an additional eight bits of address (10-bit mode) or eight bits of data (7-bit mode).

14.3.7.1 WCOL STATUS FLAG

If the user writes the SSPBUF when a Repeated Start sequence is in progress, the WCOL is set and the contents of the buffer are unchanged (the write doesn't occur).

> **Note:** Because queueing of events is not allowed, writing of the lower 5 bits of SSPCON2 is disabled until the Repeated Start condition is complete.

FIGURE 14-17: REPEAT START CONDITION WAVEFORM

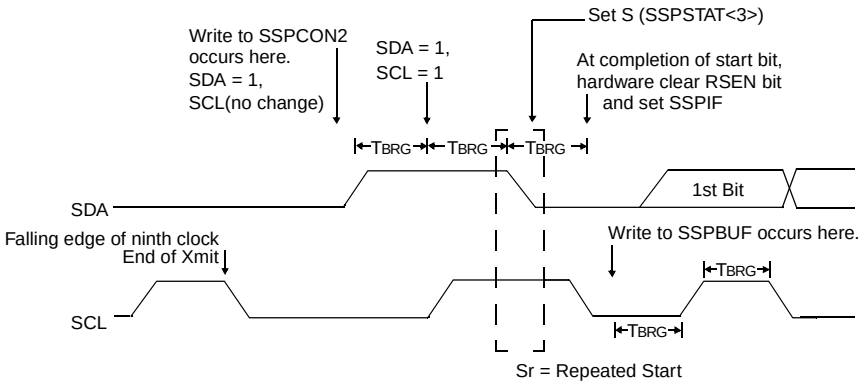

14.3.8 I²C MASTER MODE TRANSMISSION

Transmission of a data byte, a 7-bit address or the other half of a 10-bit address is accomplished by simply writing a value to the SSPBUF register. This action will set the buffer full flag bit, BF, and allow the baud rate generator to begin counting and start the next transmission. Each bit of address/data will be shifted out onto the SDA pin after the falling edge of SCL is asserted (see data hold time specification parameter 106). SCL is held low for one baud rate generator roll over count (TBRG). Data should be valid before SCL is released high (see Data setup time specification parameter 107). When the SCL pin is released high, it is held that way for TBRG. The data on the SDA pin must remain stable for that duration and some hold time after the next falling edge of SCL. After the eighth bit is shifted out (the falling edge of the eighth clock), the BF flag is cleared and the master releases SDA. allowing the slave device being addressed to respond with an $\overline{ACK}$ bit during the ninth bit time, if an address match occurs or if data was received properly. The status of $\overline{ACK}$ is written into the ACKDT bit on the falling edge of the ninth clock. If the master receives an acknowledge, the acknowledge status bit, ACKSTAT, is cleared. If not, the bit is set. After the ninth clock, the SSPIF bit is set and the master clock (baud rate generator) is suspended until the next data byte is loaded into the SSPBUF, leaving SCL low and SDA unchanged (Figure 14-18).

After the write to the SSPBUF, each bit of address will be shifted out on the falling edge of SCL until all seven address bits and the R/$\overline{W}$ bit are completed. On the falling edge of the eighth clock, the master will de-assert the SDA pin allowing the slave to respond with an acknowledge. On the falling edge of the ninth clock, the master will sample the SDA pin to see if the address was recognized by a slave. The status of the ACK bit is loaded into the ACKSTAT status bit (SSPCON2<6>). Following the falling edge of the ninth clock transmission of the address, the SSPIF is set, the BF flag is cleared and the baud rate generator is turned off until another write to the SSPBUF takes place, holding SCL low and allowing SDA to float.

14.3.8.1 BF STATUS FLAG

In transmit mode, the BF bit (SSPSTAT<0>) is set when the CPU writes to SSPBUF and is cleared when all 8 bits are shifted out.

14.3.8.2 WCOL STATUS FLAG

If the user writes the SSPBUF when a transmit is already in progress, (i.e. SSPSR is still shifting out a data byte), the WCOL is set and the contents of the buffer are unchanged (the write doesn't occur).

WCOL must be cleared in software.

14.3.8.3 ACKSTAT STATUS FLAG

In transmit mode, the ACKSTAT bit (SSPCON2<6>) is cleared when the slave has sent an acknowledge ($\overline{ACK}$ = 0), and is set when the slave does not acknowledge ($\overline{ACK}$ = 1). A slave sends an acknowledge when it has recognized its address (including a general call) or when the slave has properly received its data.

14.3.9 I²C MASTER MODE RECEPTION

Master mode reception is enabled by programming the receive enable bit, RCEN (SSPCON2<3>).

Note:	The MSSP Module must be in an IDLE STATE before the RCEN bit is set, or the RCEN bit will be disregarded.

The baud rate generator begins counting, and on each rollover, the state of the SCL pin changes (high to low/low to high) and data is shifted into the SSPSR. After the falling edge of the eighth clock, the receive enable flag is automatically cleared, the contents of the SSPSR are loaded into the SSPBUF, the BF flag bit is set, the SSPIF flag bit is set and the baud rate generator is suspended from counting, holding SCL low. The MSSP is now in IDLE state, awaiting the next command. When the buffer is read by the CPU, the BF flag bit is automatically cleared. The user can then send an acknowledge bit at the end of reception, by setting the acknowledge sequence enable bit ACKEN (SSPCON2<4>).

14.3.9.1 BF STATUS FLAG

In receive operation, the BF bit is set when an address or data byte is loaded into SSPBUF from SSPSR. It is cleared when the SSPBUF register is read.

14.3.9.2 SSPOV STATUS FLAG

In receive operation, the SSPOV bit is set when 8 bits are received into the SSPSR and the BF flag bit is already set from a previous reception.

14.3.9.3 WCOL STATUS FLAG

If the user writes the SSPBUF when a receive is already in progress (i.e. SSPSR is still shifting in a data byte), the the WCOL bit is set and the contents of the buffer are unchanged (the write doesn't occur).

FIGURE 14-18: I²C MASTER MODE WAVEFORM (TRANSMISSION, 7 OR 10-BIT ADDRESS)

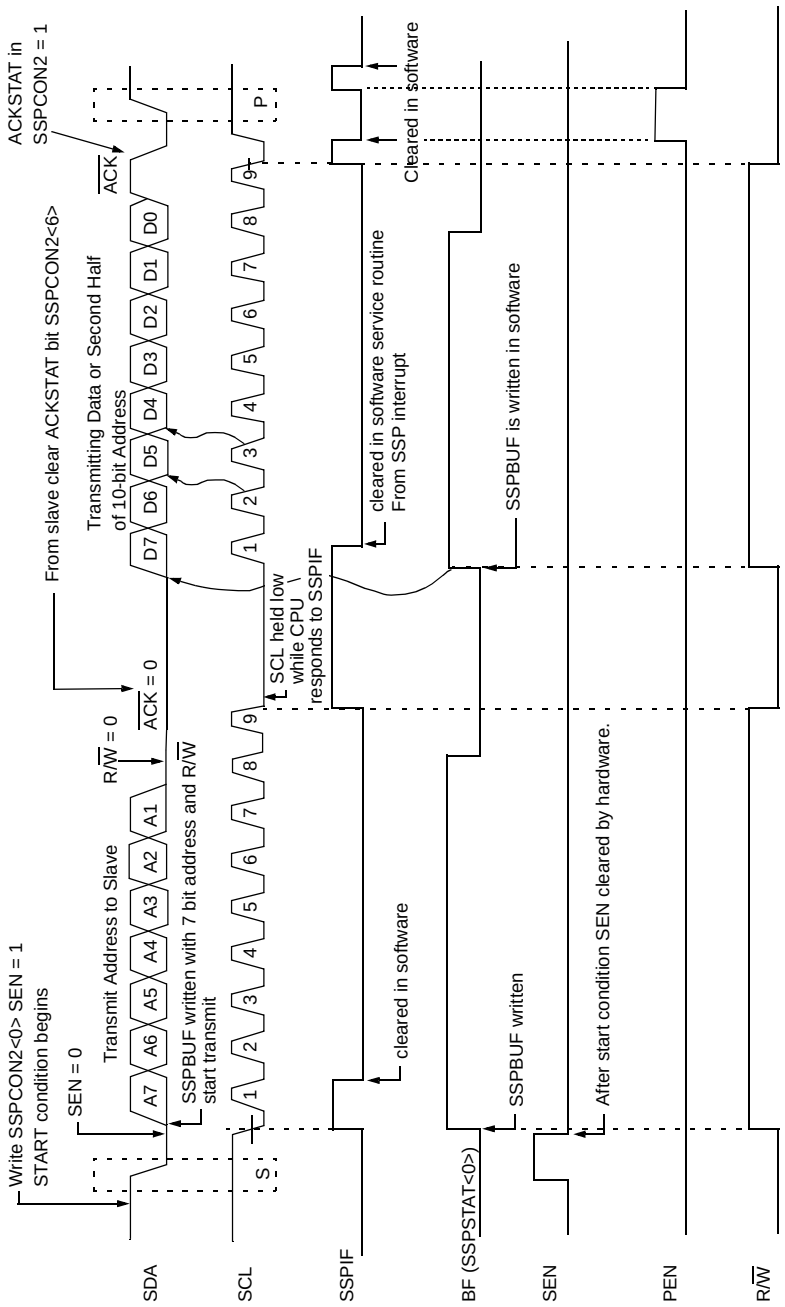

FIGURE 14-19: I²C MASTER MODE WAVEFORM (RECEPTION, 7-BIT ADDRESS)

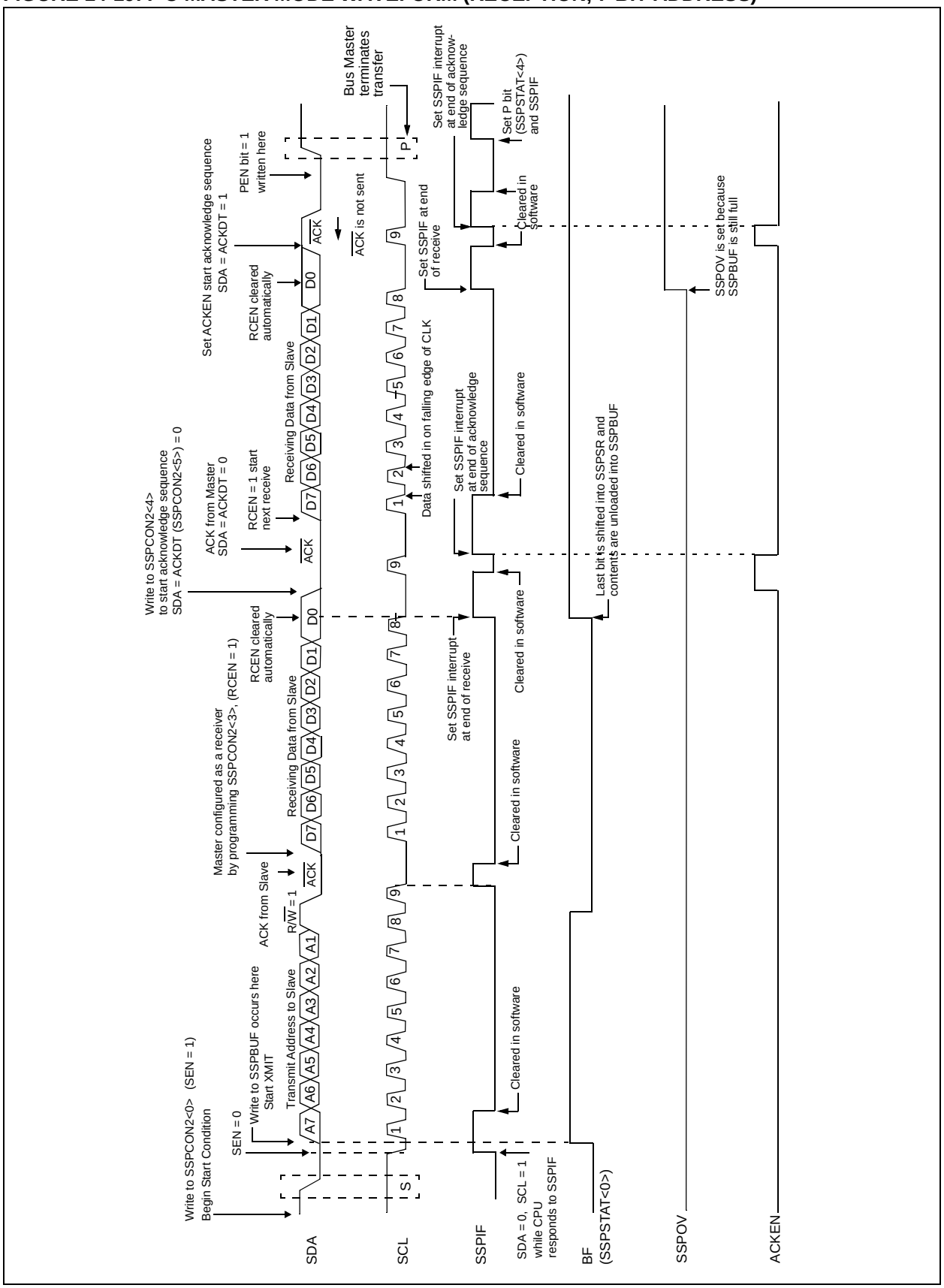

14.3.10 ACKNOWLEDGE SEQUENCE TIMING

An acknowledge sequence is enabled by setting the acknowledge sequence enable bit ACKEN (SSPCON2<4>). When this bit is set, the SCL pin is pulled low and the contents of the acknowledge data bit is presented on the SDA pin. If the user wishes to generate an acknowledge, then the ACKDT bit should be cleared. If not, the user should set the ACKDT bit before starting an acknowledge sequence. The baud rate generator then counts for one rollover period (TBRG) and the SCL pin is de-asserted (pulled high). When the SCL pin is sampled high (clock arbitration), the baud rate generator counts for TBRG. The SCL pin is then pulled low. Following this, the ACKEN bit is automatically cleared, the baud rate generator is turned off and the MSSP module then goes into IDLE mode (Figure 14-20).

14.3.10.1 WCOL STATUS FLAG

If the user writes the SSPBUF when an acknowledge sequence is in progress, then WCOL is set and the contents of the buffer are unchanged (the write doesn't occur).

14.3.11 STOP CONDITION TIMING

A stop bit is asserted on the SDA pin at the end of a receive/transmit by setting the Stop sequence enable bit, PEN (SSPCON2<2>). At the end of a receive/transmit the SCL line is held low after the falling edge of the ninth clock. When the PEN bit is set, the master will assert the SDA line low. When the SDA line is sampled low, the baud rate generator is reloaded and counts down to 0. When the baud rate generator times out, the SCL pin will be brought high, and one TBRG (baud rate generator rollover count) later, the SDA pin will be de-asserted. When the SDA pin is sampled high while SCL is high, the P bit (SSPSTAT<4>) is set. A TBRG later, the PEN bit is cleared and the SSPIF bit is set (Figure 14-21).

14.3.11.1 WCOL STATUS FLAG

If the user writes the SSPBUF when a STOP sequence is in progress, then the WCOL bit is set and the contents of the buffer are unchanged (the write doesn't occur).

FIGURE 14-20: ACKNOWLEDGE SEQUENCE WAVEFORM

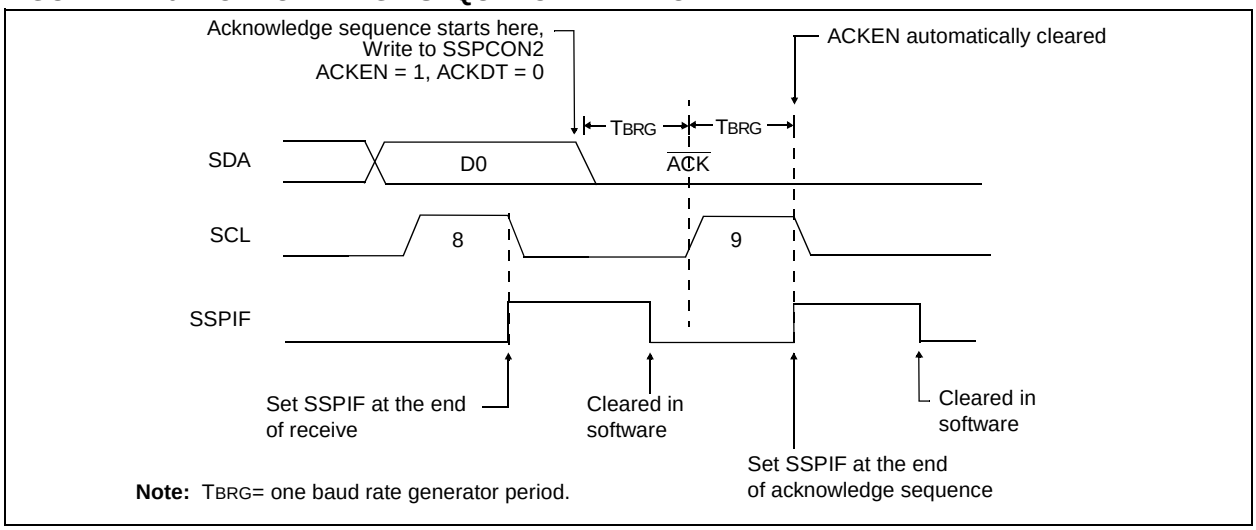

Note: TBRG= one baud rate generator period.

FIGURE 14-21: STOP CONDITION RECEIVE OR TRANSMIT MODE

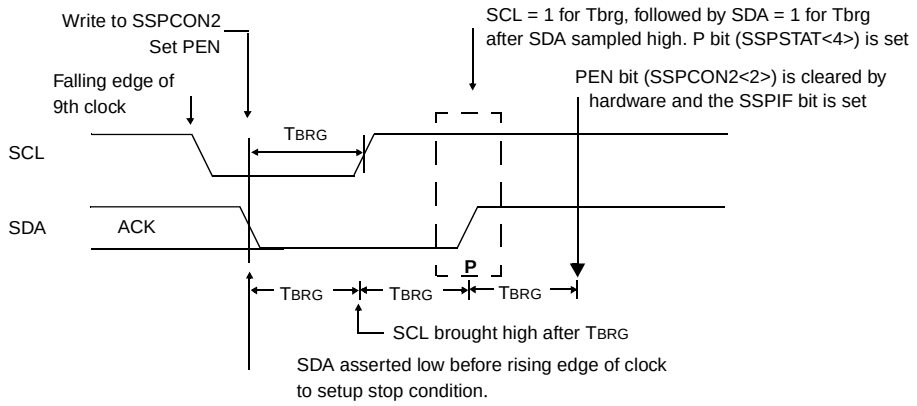

Note: TBRG = one baud rate generator period.

14.3.12 CLOCK ARBITRATION

Clock arbitration occurs when the master, during any receive, transmit or repeated start/stop condition, de-asserts the SCL pin (SCL allowed to float high). When the SCL pin is allowed to float high, the baud rate generator (BRG) is suspended from counting until the SCL pin is actually sampled high. When the SCL pin is sampled high, the baud rate generator is reloaded with the contents of SSPADD<6:0> and begins counting. This ensures that the SCL high time will always be at least one BRG rollover count in the event that the clock is held low by an external device (Figure 14-22).

14.3.13 SLEEP OPERATION

While in sleep mode, the I^2C module can receive addresses or data, and when an address match or complete byte transfer occurs, wake the processor from sleep (if the MSSP interrupt is enabled).

14.3.14 EFFECT OF A RESET

A reset disables the MSSP module and terminates the current transfer.

FIGURE 14-22: CLOCK ARBITRATION TIMING IN MASTER TRANSMIT MODE

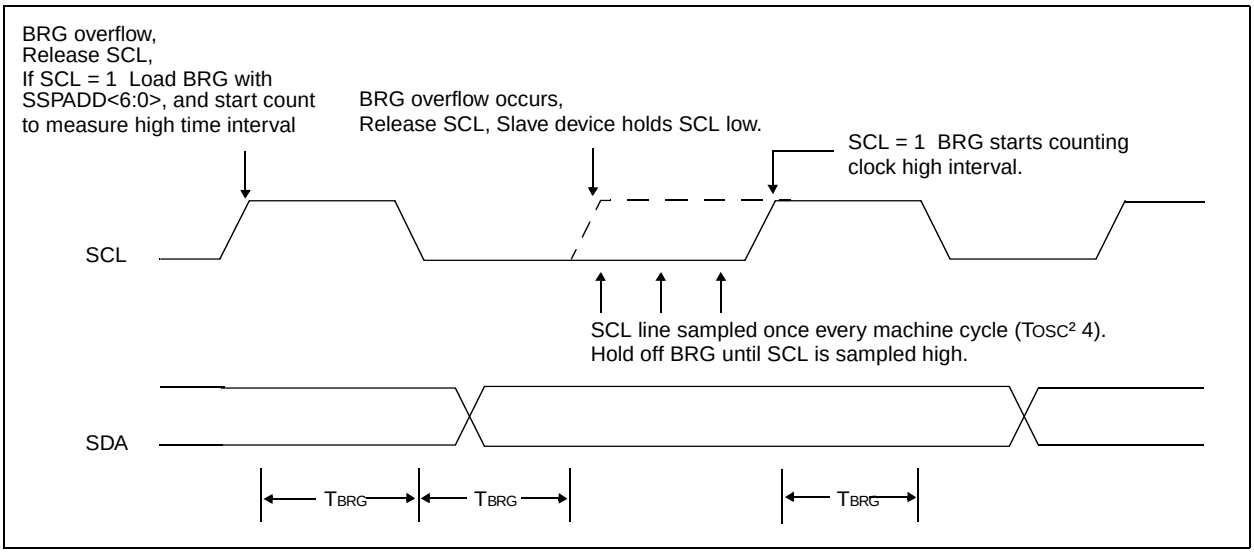

14.3.15 MULTI-MASTER MODE

In multi-master mode, the interrupt generation on the detection of the START and STOP conditions allows the determination of when the bus is free. The STOP (P) and START (S) bits are cleared from a reset or when the MSSP module is disabled. Control of the I^2C bus may be taken when the P bit (SSPSTAT<4>) is set, or the bus is idle with both the S and P bits clear. When the bus is busy, enabling the SSP Interrupt will generate the interrupt when the STOP condition occurs.

In multi-master operation, the SDA line must be monitored, for arbitration, to see if the signal level is the expected output level. This check is performed in hardware, with the result placed in the BCLIF bit.

The states where arbitration can be lost are:

- Address Transfer
- Data Transfer
- A Start Condition
- A Repeated Start Condition
- An Acknowledge Condition

14.3.16 MULTI -MASTER COMMUNICATION, BUS COLLISION, AND BUS ARBITRATION

Multi-Master mode support is achieved by bus arbitration. When the master outputs address/data bits onto the SDA pin, arbitration takes place when the master outputs a '1' on SDA by letting SDA float high and another master asserts a '0'. When the SCL pin floats high, data should be stable. If the expected data on SDA is a '1' and the data sampled on the SDA pin = '0', then a bus collision has taken place. The master will set the Bus Collision Interrupt Flag BCLIF and reset the I^2C port to its IDLE state. (Figure 14-23).

If a transmit was in progress when the bus collision occurred, the transmission is halted, the BF flag is cleared, the SDA and SCL lines are de-asserted, and the SSPBUF can be written to. When the user services the bus collision interrupt service routine, and if the I^2C bus is free, the user can resume communication by asserting a START condition.

If a START, Repeated Start, STOP, or Acknowledge condition was in progress when the bus collision occurred, the condition is aborted, the SDA and SCL lines are de-asserted, and the respective control bits in the SSPCON2 register are cleared. When the user services the bus collision interrupt service routine, and if the I^2C bus is free, the user can resume communication by asserting a START condition.

The Master will continue to monitor the SDA and SCL pins. If a STOP condition occurs, the SSPIF bit will be set.

A write to the SSPBUF will start the transmission of data at the first data bit, regardless of where the transmitter left off when the bus collision occurred.

In multi-master mode, the interrupt generation on the detection of start and stop conditions allows the determination of when the bus is free. Control of the I^2C bus can be taken when the P bit is set in the SSPSTAT register, or the bus is idle and the S and P bits are cleared.

FIGURE 14-23: BUS COLLISION TIMING FOR TRANSMIT AND ACKNOWLEDGE

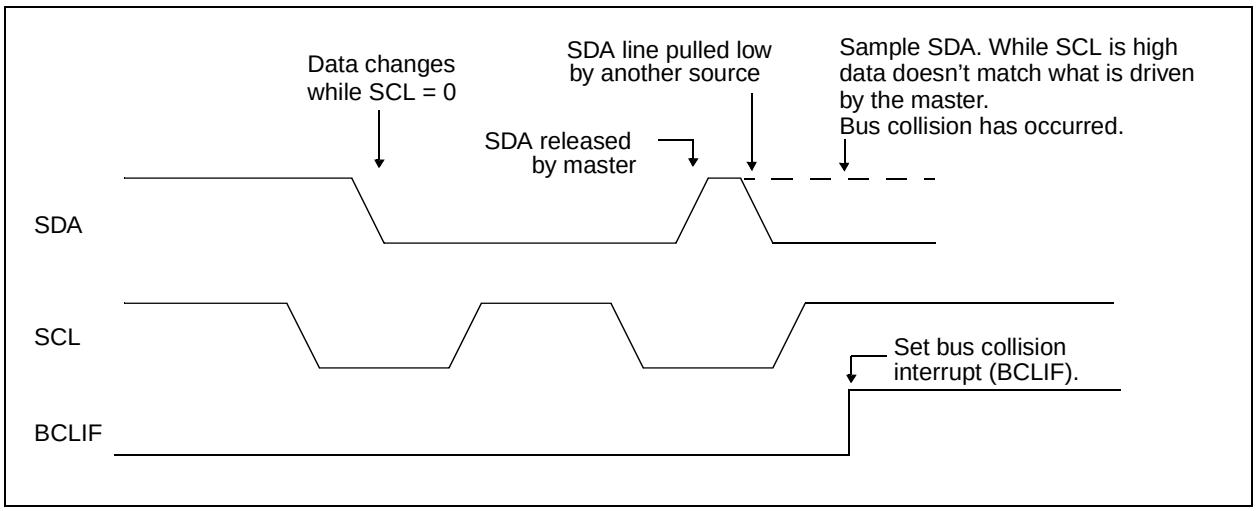

14.3.16.1 BUS COLLISION DURING A START CONDITION

During a START condition, a bus collision occurs if:

a) SDA or SCL are sampled low at the beginning of the START condition (Figure 14-24).

b) SCL is sampled low before SDA is asserted low (Figure 14-25).

During a START condition, both the SDA and the SCL pins are monitored.

If:

the SDA pin is already low
or the SCL pin is already low,

then:

the START condition is aborted,
and the BCLIF flag is set,
and the MSSP module is reset to its IDLE state (Figure 14-24).

The START condition begins with the SDA and SCL pins de-asserted. When the SDA pin is sampled high, the baud rate generator is loaded from SSPADD<6:0> and counts down to 0. If the SCL pin is sampled low while SDA is high, a bus collision occurs, because it is assumed that another master is attempting to drive a data '1' during the START condition.

If the SDA pin is sampled low during this count, the BRG is reset and the SDA line is asserted early (Figure 14-26). If however a '1' is sampled on the SDA pin, the SDA pin is asserted low at the end of the BRG count. The baud rate generator is then reloaded and counts down to 0, and during this time, if the SCL pins is sampled as '0', a bus collision does not occur. At the end of the BRG count, the SCL pin is asserted low.

> **Note:** The reason that bus collision is not a factor during a START condition is that no two bus masters can assert a START condition at the exact same time. Therefore, one master will always assert SDA before the other. This condition does not cause a bus collision, because the two masters must be allowed to arbitrate the first address following the START condition. If the address is the same, arbitration must be allowed to continue into the data portion, Repeated Start or STOP conditions.

FIGURE 14-24: BUS COLLISION DURING START CONDITION (SDA ONLY)

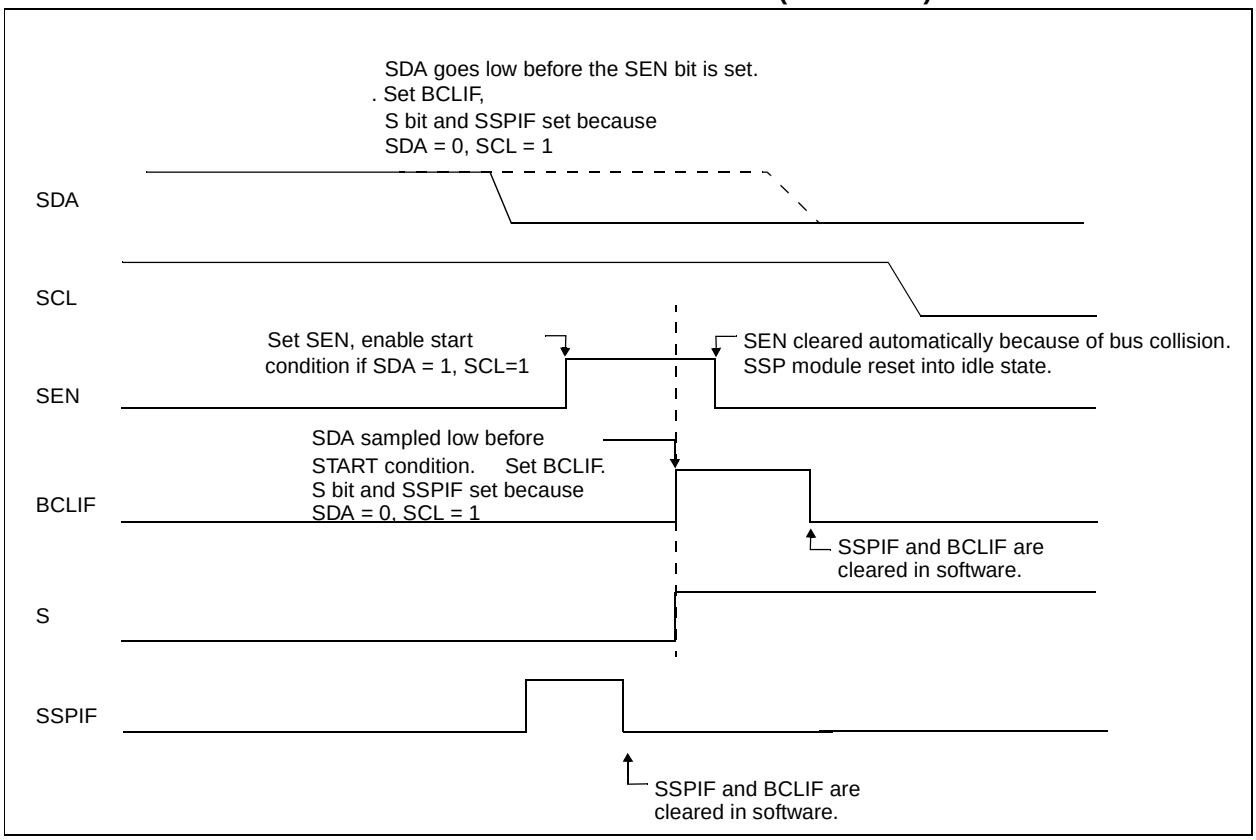

FIGURE 14-25: BUS COLLISION DURING START CONDITION (SCL = 0)

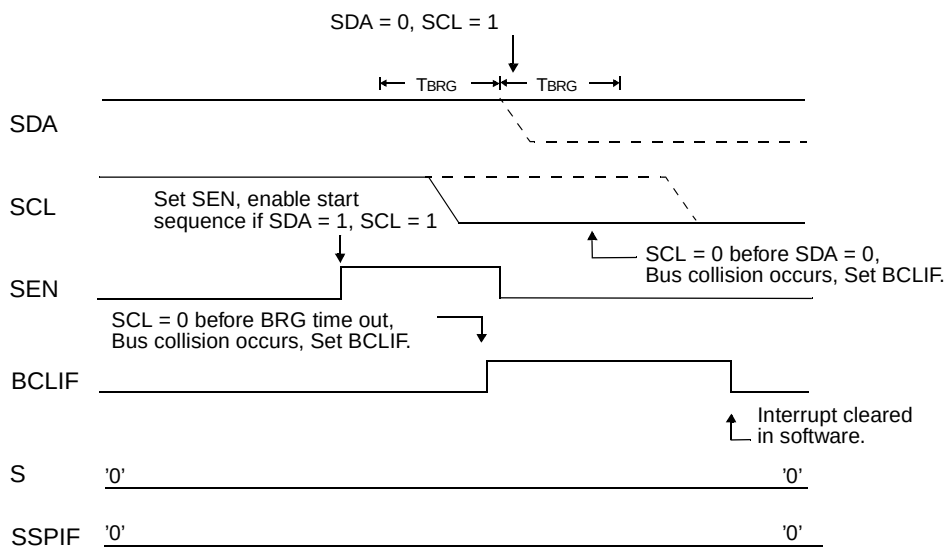

FIGURE 14-26: BRG RESET DUE TO SDA ARBITRATION DURING START CONDITION

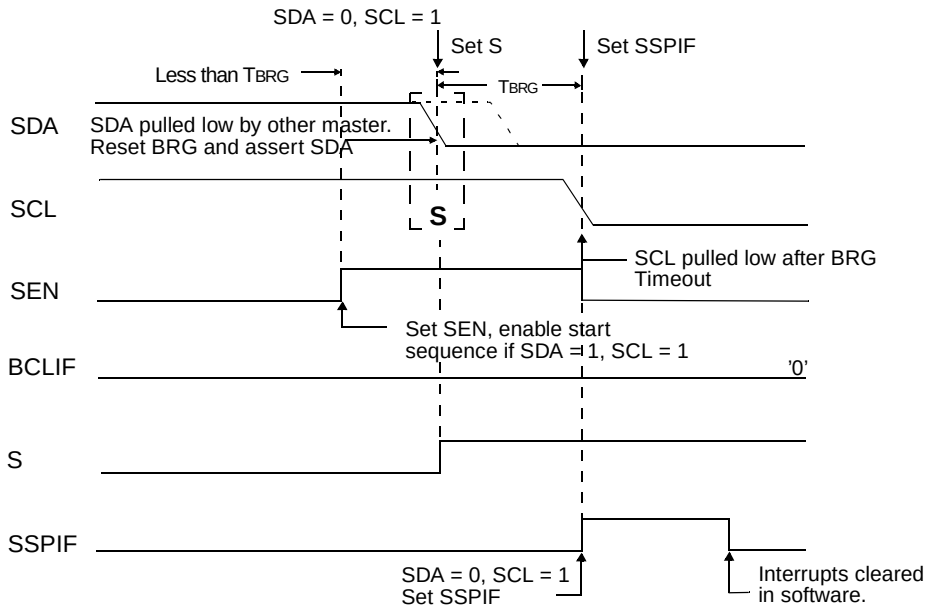

14.3.16.2 BUS COLLISION DURING A REPEATED START CONDITION

During a Repeated Start condition, a bus collision occurs if:

a) A low level is sampled on SDA when SCL goes from low level to high level.

b) SCL goes low before SDA is asserted low, indicating that another master is attempting to transmit a data '1'.

When the user de-asserts SDA and the pin is allowed to float high, the BRG is loaded with SSPADD<6:0> and counts down to 0. The SCL pin is then de-asserted, and when sampled high, the SDA pin is sampled.

If SDA is low, a bus collision has occurred (i.e. another master, Figure 14-27, is attempting to transmit a data '0'). If SDA is sampled high, the BRG is reloaded and begins counting. If SDA goes from high to low before the BRG times out, no bus collision occurs because no two masters can assert SDA at exactly the same time.

If SCL goes from high to low before the BRG times out and SDA has not already been asserted, a bus collision occurs. In this case, another master is attempting to transmit a data '1' during the Repeated Start condition, Figure 14-28.

If at the end of the BRG time out both SCL and SDA are still high, the SDA pin is driven low and the BRG is reloaded and begins counting. At the end of the count, regardless of the status of the SCL pin, the SCL pin is driven low and the Repeated Start condition is complete.

FIGURE 14-27: BUS COLLISION DURING A REPEATED START CONDITION (CASE 1)

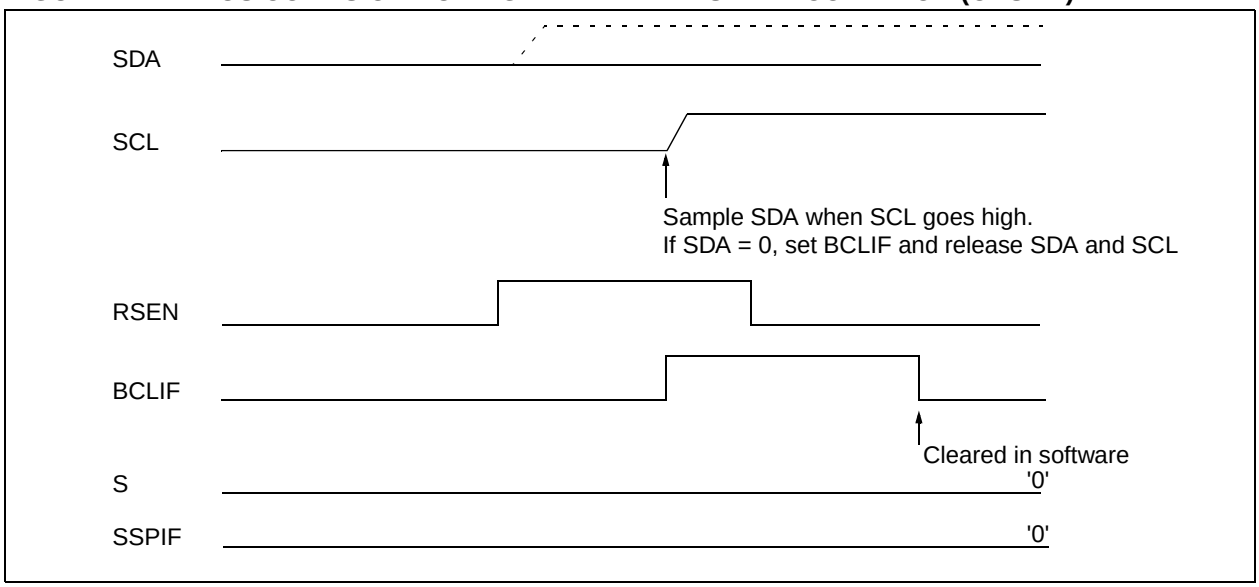

FIGURE 14-28: BUS COLLISION DURING REPEATED START CONDITION (CASE 2)

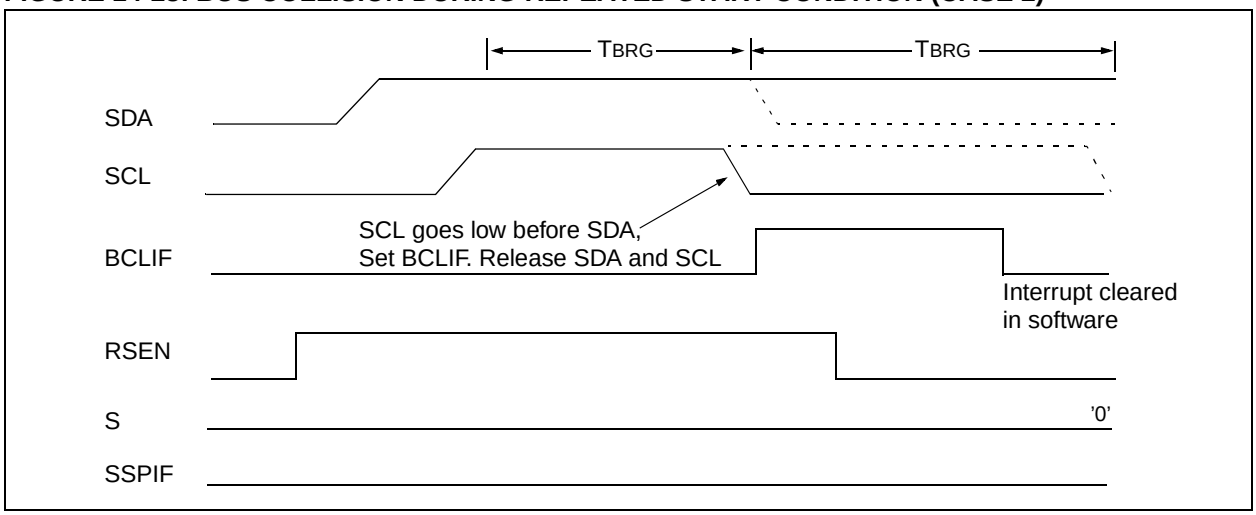

14.3.16.3 BUS COLLISION DURING A STOP CONDITION

Bus collision occurs during a STOP condition if:

a) After the SDA pin has been de-asserted and allowed to float high, SDA is sampled low after the BRG has timed out.

b) After the SCL pin is de-asserted, SCL is sampled low before SDA goes high.

The STOP condition begins with SDA asserted low. When SDA is sampled low, the SCL pin is allowed to float. When the pin is sampled high (clock arbitration), the baud rate generator is loaded with SSPADD<6:0> and counts down to 0. After the BRG times out SDA is sampled. If SDA is sampled low, a bus collision has occurred. This is due to another master attempting to drive a data ’0’ (Figure 14-29). If the SCL pin is sampled low before SDA is allowed to float high, a bus collision occurs. This is another case of another master attempting to drive a data ’0’ (Figure 14-30).

FIGURE 14-29: BUS COLLISION DURING A STOP CONDITION (CASE 1)

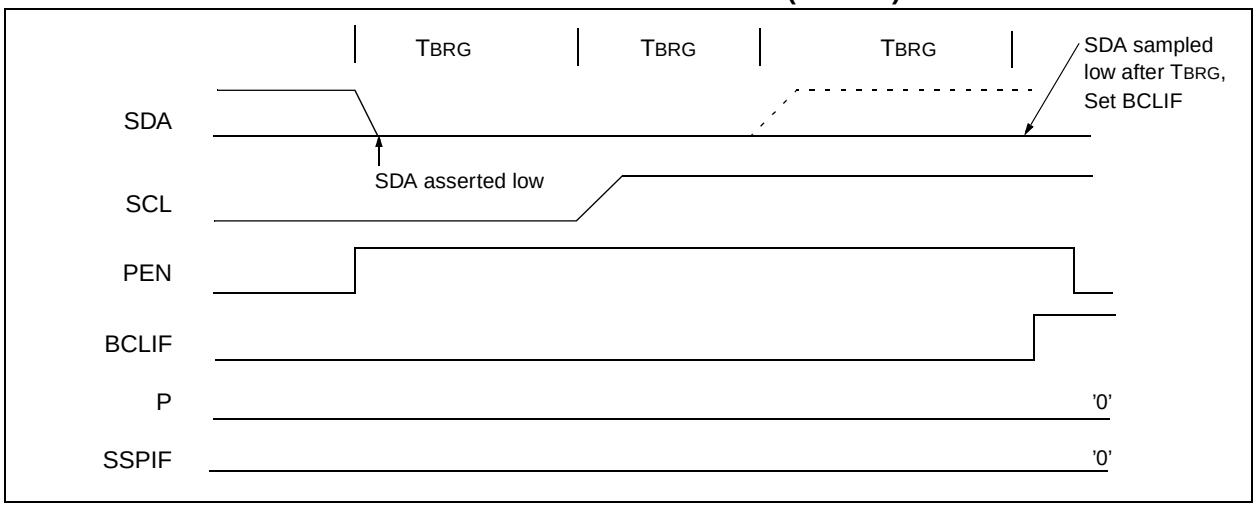

FIGURE 14-30: BUS COLLISION DURING A STOP CONDITION (CASE 2)

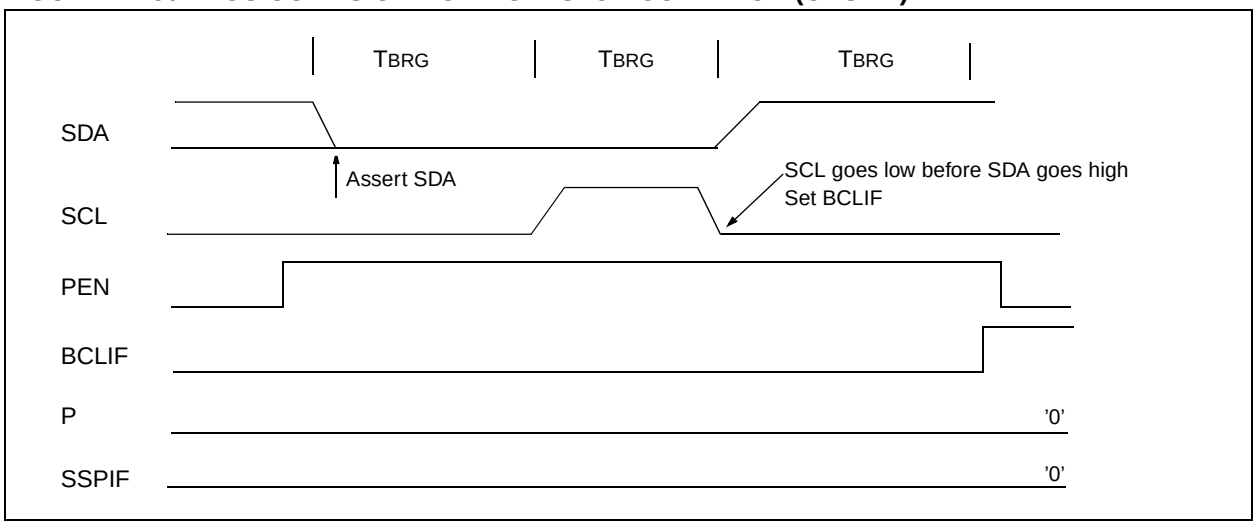

NOTES:

15.0 ADDRESSABLE UNIVERSAL SYNCHRONOUS ASYNCHRONOUS RECEIVER TRANSMITTER (USART)

The Universal Synchronous Asynchronous Receiver Transmitter (USART) module is one of the two serial I/O modules. (USART is also known as a Serial Communications Interface or SCI). The USART can be configured as a full duplex asynchronous system that can communicate with peripheral devices, such as CRT terminals and personal computers, or it can be configured as a half duplex synchronous system that can communicate with peripheral devices, such as A/D or D/A integrated circuits, Serial EEPROMs, etc.

The USART can be configured in the following modes:

- Asynchronous (full duplex)
- Synchronous - Master (half duplex)
- Synchronous - Slave (half duplex)

Bit SPEN (RCSTA<7>) and bits TRISC<7:6> have to be set in order to configure pins RC6/TX/CK and RC7/RX/DT as the Universal Synchronous Asynchronous Receiver Transmitter.

Register 15-1: TXSTA: Transmit Status and Control Register

R/W-0	R/W-0	R/W-0	R/W-0	U-0	R/W-0	R-1	R/W-0
CSRC	TX9	TXEN	SYNC	—	BRGH	TRMT	TX9D
bit 7							bit 0

bit 7 **CSRC:** Clock Source Select bit
Asynchronous mode
Don't care

Synchronous mode
1 = Master mode (Clock generated internally from BRG)
0 = Slave mode (Clock from external source)

bit 6 **TX9**: 9-bit Transmit Enable bit
1 = Selects 9-bit transmission
0 = Selects 8-bit transmission

bit 5 **TXEN**: Transmit Enable bit
1 = Transmit enabled
0 = Transmit disabled

Note: SREN/CREN overrides TXEN in SYNC mode.

bit 4 **SYNC**: USART Mode Select bit
1 = Synchronous mode
0 = Asynchronous mode

bit 3 **Unimplemented:** Read as '0'

bit 2 **BRGH**: High Baud Rate Select bit
Asynchronous mode
1 = High speed
0 = Low speed

Synchronous mode
Unused in this mode

bit 1 **TRMT**: Transmit Shift Register Status bit
1 = TSR empty
0 = TSR full

bit 0 **TX9D:** 9th bit of transmit data. Can be Address/Data bit or a parity bit.

Legend:			
R = Readable bit	W = Writable bit	U = Unimplemented bit, read as '0'	
- n = Value at POR reset	'1' = Bit is set	'0' = Bit is cleared	x = Bit is unknown

Register 15-2: RCSTA: Receive Status and Control Register

R/W-0	R/W-0	R/W-0	R/W-0	R/W-0	R-0	R-0	R-x
SPEN	RX9	SREN	CREN	ADDEN	FERR	OERR	RX9D
bit 7							bit 0

bit 7 **SPEN:** Serial Port Enable bit
1 = Serial port enabled (Configures RX/DT and TX/CK pins as serial port pins)
0 = Serial port disabled

bit 6 **RX9**: 9-bit Receive Enable bit
1 = Selects 9-bit reception
0 = Selects 8-bit reception

bit 5 **SREN**: Single Receive Enable bit
Asynchronous mode
Don't care

Synchronous mode - master
1 = Enables single receive
0 = Disables single receive
This bit is cleared after reception is complete.

Synchronous mode - slave
Unused in this mode

bit 4 **CREN**: Continuous Receive Enable bit
Asynchronous mode
1 = Enables continuous receive
0 = Disables continuous receive

Synchronous mode
1 = Enables continuous receive until enable bit CREN is cleared (CREN overrides SREN)
0 = Disables continuous receive

bit 3 **ADDEN**: Address Detect Enable bit
Asynchronous mode 9-bit (RX9 = 1)
1 = Enables address detection, enable interrupt and load of the receive buffer when RSR<8> is set
0 = Disables address detection, all bytes are received, and ninth bit can be used as parity bit

bit 2 **FERR**: Framing Error bit
1 = Framing error (Can be updated by reading RCREG register and receive next valid byte)
0 = No framing error

bit 1 **OERR**: Overrun Error bit
1 = Overrun error (Can be cleared by clearing bit CREN)
0 = No overrun error

bit 0 **RX9D:** 9th bit of received data, can be Address/Data bit or a parity bit.

Legend:			
R = Readable bit	W = Writable bit	U = Unimplemented bit, read as '0'	
- n = Value at POR reset	'1' = Bit is set	'0' = Bit is cleared	x = Bit is unknown

15.1 USART Baud Rate Generator (BRG)

The BRG supports both the Asynchronous and Synchronous modes of the USART. It is a dedicated 8-bit baud rate generator. The SPBRG register controls the period of a free running 8-bit timer. In asynchronous mode, bit BRGH (TXSTA<2>) also controls the baud rate. In synchronous mode, bit BRGH is ignored. Table 15-1 shows the formula for computation of the baud rate for different USART modes, which only apply in master mode (internal clock).

Given the desired baud rate and Fosc, the nearest integer value for the SPBRG register can be calculated using the formula in Table 15-1. From this, the error in baud rate can be determined.

Example 15-1 shows the calculation of the baud rate error for the following conditions:

FOSC = 16 MHz
Desired Baud Rate = 9600
BRGH = 0
SYNC = 0

It may be advantageous to use the high baud rate (BRGH = 1) even for slower baud clocks. This is because the FOSC/(16(X + 1)) equation can reduce the baud rate error in some cases.

Writing a new value to the SPBRG register causes the BRG timer to be reset (or cleared). This ensures the BRG does not wait for a timer overflow before outputting the new baud rate.

15.1.1 SAMPLING

The data on the RC7/RX/DT pin is sampled three times by a majority detect circuit to determine if a high or a low level is present at the RX pin.

EXAMPLE 15-1: CALCULATING BAUD RATE ERROR

Desired Baud rate = Fosc / (64 (X + 1))

Solving for X:

X = ((Fosc / Desired Baud rate) / 64) - 1
X = ((16000000 / 9600) / 64) - 1
X = [25.042] = 25

Calculated Baud Rate = 16000000 / (64 (25 + 1))
= 9615

Error = (Calculated Baud Rate - Desired Baud Rate) / Desired Baud Rate
= (9615 - 9600) / 9600
= 0.16%

TABLE 15-1: BAUD RATE FORMULA

SYNC	BRGH = 0 (Low Speed)	BRGH = 1 (High Speed)
0	(Asynchronous) Baud Rate = FOSC/(64(X+1))	Baud Rate= FOSC/(16(X+1))
1	(Synchronous) Baud Rate = FOSC/(4(X+1))	NA

X = value in SPBRG (0 to 255)

TABLE 15-2: REGISTERS ASSOCIATED WITH BAUD RATE GENERATOR

Name	Bit 7	Bit 6	Bit 5	Bit 4	Bit 3	Bit 2	Bit 1	Bit 0	Value on POR, BOR	Value on all other resets
TXSTA	CSRC	TX9	TXEN	SYNC	—	BRGH	TRMT	TX9D	0000 -010	0000 -010
RCSTA	SPEN	RX9	SREN	CREN	—	FERR	OERR	RX9D	0000 -00x	0000 -00x
SPBRG	Baud Rate Generator Register								0000 0000	0000 0000

Legend: x = unknown, - = unimplemented read as '0'.
Shaded cells are not used by the BRG.

TABLE 15-3: BAUD RATES FOR SYNCHRONOUS MODE

BAUD RATE (K)	FOSC = 20 MHz	%	SPBRG value (decimal)	16 MHz	%	SPBRG value (decimal)	10 MHz	%	SPBRG value (decimal)	7.15909 MHz	%	SPBRG value (decimal)
0.3	NA	-	-	NA	-	-	NA	-	-	NA	-	-
1.2	NA	-	-	NA	-	-	NA	-	-	NA	-	-
2.4	NA	-	-	NA	-	-	NA	-	-	NA	-	-
9.6	NA	-	-	NA	-	-	9.766	+1.73	255	9.622	+0.23	185
19.2	19.53	+1.73	255	19.23	+0.16	207	19.23	+0.16	129	19.24	+0.23	92
76.8	76.92	+0.16	64	76.92	+0.16	51	75.76	-1.36	32	77.82	+1.32	22
96	96.15	+0.16	51	95.24	-0.79	41	96.15	+0.16	25	94.20	-1.88	18
300	294.1	-1.96	16	307.69	+2.56	12	312.5	+4.17	7	298.3	-0.57	5
500	500	0	9	500	0	7	500	0	4	NA	-	-
HIGH	5000	-	0	4000	-	0	2500	-	0	1789.8	-	0
LOW	19.53	-	255	15.625	-	255	9.766	-	255	6.991	-	255

BAUD RATE (K)	FOSC = 5.0688 MHz	%	SPBRG	4 MHz	%	SPBRG value (decimal)	3.579545 MHz	%	SPBRG value (decimal)	1 MHz	%	SPBRG value (decimal)	32.768 kHz	%	SPBRG value (decimal)
0.3	NA	-	-	NA	-	-	NA	-	-	NA	-	-	0.303	+1.14	26
1.2	NA	-	-	NA	-	-	NA	-	-	1.202	+0.16	207	1.170	-2.48	6
2.4	NA	-	-	NA	-	-	NA	-	-	2.404	+0.16	103	NA	-	-
9.6	9.6	0	131	9.615	+0.16	103	9.622	+0.23	92	9.615	+0.16	25	NA	-	-
19.2	19.2	0	65	19.231	+0.16	51	19.04	-0.83	46	19.24	+0.16	12	NA	-	-
76.8	79.2	+3.13	15	76.923	+0.16	12	74.57	-2.90	11	83.34	+8.51	2	NA	-	-
96	97.48	+1.54	12	1000	+4.17	9	99.43	+3.57	8	NA	-	-	NA	-	-
300	316.8	+5.60	3	NA	-	-	298.3	-0.57	2	NA	-	-	NA	-	-
500	NA	-	-	NA	-	-	NA	-	-	NA	-	-	NA	-	-
HIGH	1267	-	0	100	-	0	894.9	-	0	250	-	0	8.192	-	0
LOW	4.950	-	255	3.906	-	255	3.496	-	255	0.9766	-	255	0.032	-	255

TABLE 15-4: BAUD RATES FOR ASYNCHRONOUS MODE (BRGH = 0)

BAUD RATE (K)	FOSC = 20 MHz	%	SPBRG value (decimal)	16 MHz	%	SPBRG value (decimal)	10 MHz	%	SPBRG value (decimal)	7.15909 MHz	%	SPBRG value (decimal)
0.3	NA	-	-	NA	-	-	NA	-	-	NA	-	-
1.2	1.221	+1.73	255	1.202	+0.16	207	1.202	+0.16	129	1.203	+0.23	92
2.4	2.404	+0.16	129	2.404	+0.16	103	2.404	+0.16	64	2.380	-0.83	46
9.6	9.469	-1.36	32	9.615	+0.16	25	9.766	+1.73	15	9.322	-2.90	11
19.2	19.53	+1.73	15	19.23	+0.16	12	19.53	+1.73	7	18.64	-2.90	5
76.8	78.13	+1.73	3	83.33	+8.51	2	78.13	+1.73	1	NA	-	-
96	104.2	+8.51	2	NA	-	-	NA	-	-	NA	-	-
300	312.5	+4.17	0	NA	-	-	NA	-	-	NA	-	-
500	NA	-	-	NA	-	-	NA	-	-	NA	-	-
HIGH	312.5	-	0	250	-	0	156.3	-	0	111.9	-	0
LOW	1.221	-	255	0.977	-	255	0.6104	-	255	0.437	-	255

BAUD RATE (K)	FOSC = 5.0688 MHz	%	SPBRG	4 MHz	%	SPBRG value (decimal)	3.579545 MHz	%	SPBRG value (decimal)	1 MHz	%	SPBRG value (decimal)	32.768 kHz	%	SPBRG value (decimal)
0.3	0.31	+3.13	255	0.3005	-0.17	207	0.301	+0.23	185	0.300	+0.16	51	0.256	-14.67	1
1.2	1.2	0	65	1.202	+1.67	51	1.190	-0.83	46	1.202	+0.16	12	NA	-	-
2.4	2.4	0	32	2.404	+1.67	25	2.432	+1.32	22	2.232	-6.99	6	NA	-	-
9.6	9.9	+3.13	7	NA	-	-	9.322	-2.90	5	NA	-	-	NA	-	-
19.2	19.8	+3.13	3	NA	-	-	18.64	-2.90	2	NA	-	-	NA	-	-
76.8	79.2	+3.13	0	NA	-	-	NA	-	-	NA	-	-	NA	-	-
96	NA	-	-	NA	-	-	NA	-	-	NA	-	-	NA	-	-
300	NA	-	-	NA	-	-	NA	-	-	NA	-	-	NA	-	-
500	NA	-	-	NA	-	-	NA	-	-	NA	-	-	NA	-	-
HIGH	79.2	-	0	62.500	-	0	55.93	-	0	15.63	-	0	0.512	-	0
LOW	0.3094	-	255	3.906	-	255	0.2185	-	255	0.0610	-	255	0.0020	-	255

TABLE 15-5: BAUD RATES FOR ASYNCHRONOUS MODE (BRGH = 1)

BAUD RATE (K)	FOSC = 20 MHz	%	SPBRG value (decimal)	16 MHz	%	SPBRG value (decimal)	10 MHz	%	SPBRG value (decimal)	7.16 MHz	%	SPBRG value (decimal)
9.6	9.615	+0.16	129	9.615	+0.16	103	9.615	+0.16	64	9.520	-0.83	46
19.2	19.230	+0.16	64	19.230	+0.16	51	18.939	-1.36	32	19.454	+1.32	22
38.4	37.878	-1.36	32	38.461	+0.16	25	39.062	+1.7	15	37.286	-2.90	11
57.6	56.818	-1.36	21	58.823	+2.12	16	56.818	-1.36	10	55.930	-2.90	7
115.2	113.636	-1.36	10	111.111	-3.55	8	125	+8.51	4	111.860	-2.90	3
250	250	0	4	250	0	3	NA	-	-	NA	-	-
625	625	0	1	NA	-	-	625	0	0	NA	-	-
1250	1250	0	0	NA	-	-	NA	-	-	NA	-	-

BAUD RATE (K)	FOSC = 5.068	%	SPBRG value (decimal)	4 MHz	%	SPBRG value (decimal)	3.579 MHz	%	SPBRG value (decimal)	1 MHz	%	SPBRG value (decimal)	32.768 kHz	%	SPBRG value (decimal)
9.6	9.6	0	32	NA	-	-	9.727	+1.32	22	8.928	-6.99	6	NA	-	-
19.2	18.645	-2.94	16	1.202	+0.17	207	18.643	-2.90	11	20.833	+8.51	2	NA	-	-
38.4	39.6	+3.12	7	2.403	+0.13	103	37.286	-2.90	5	31.25	-18.61	1	NA	-	-
57.6	52.8	-8.33	5	9.615	+0.16	25	55.930	-2.90	3	62.5	+8.51	0	NA	-	-
115.2	105.6	-8.33	2	19.231	+0.16	12	111.86	-2.90	1	NA	-	-	NA	-	-
250	NA	-	-	NA	-	-	223.72	-10.51	0	NA	-	-	NA	-	-
625	NA	-	-	NA	-	-	NA	-	-	NA	-	-	NA	-	-
1250	NA	-	-	NA	-	-	NA	-	-	NA	-	-	NA	-	-

15.2 USART Asynchronous Mode

In this mode, the USART uses standard non-return-to-zero (NRZ) format (one start bit, eight or nine data bits and one stop bit). The most common data format is 8-bits. An on-chip dedicated 8-bit baud rate generator can be used to derive standard baud rate frequencies from the oscillator. The USART transmits and receives the LSb first. The USART's transmitter and receiver are functionally independent, but use the same data format and baud rate. The baud rate generator produces a clock, either x16 or x64 of the bit shift rate, depending on bit BRGH (TXSTA<2>). Parity is not supported by the hardware, but can be implemented in software (and stored as the ninth data bit). Asynchronous mode is stopped during SLEEP.

Asynchronous mode is selected by clearing bit SYNC (TXSTA<4>).

The USART Asynchronous module consists of the following important elements:

- Baud Rate Generator
- Sampling Circuit
- Asynchronous Transmitter
- Asynchronous Receiver

15.2.1 USART ASYNCHRONOUS TRANSMITTER

The USART transmitter block diagram is shown in Figure 15-1. The heart of the transmitter is the transmit (serial) shift register (TSR). The shift register obtains its data from the read/write transmit buffer, TXREG. The TXREG register is loaded with data in software. The TSR register is not loaded until the STOP bit has been transmitted from the previous load. As soon as the STOP bit is transmitted, the TSR is loaded with new data from the TXREG register (if available). Once the TXREG register transfers the data to the TSR register (occurs in one TCY), the TXREG register is empty and flag bit TXIF (PIR1<4>) is set. This interrupt can be enabled/disabled by setting/clearing enable bit TXIE (PIE1<4>). Flag bit TXIF will be set regardless of the state of enable bit TXIE and cannot be cleared in software. It will reset only when new data is loaded into the TXREG register. While flag bit TXIF indicated the status of the TXREG register, another bit TRMT (TXSTA<1>) shows the status of the TSR register. Status bit TRMT is a read only bit, which is set when the TSR register is empty. No interrupt logic is tied to this bit, so the user has to poll this bit in order to determine if the TSR register is empty.

Note 1:	The TSR register is not mapped in data memory, so it is not available to the user.
Note 2:	Flag bit TXIF is set when enable bit TXEN is set.

Steps to follow when setting up an asynchronous transmission:

1. Initialize the SPBRG register for the appropriate baud rate. If a high speed baud rate is desired, set bit BRGH. (Section 15.1)
2. Enable the asynchronous serial port by clearing bit SYNC and setting bit SPEN.
3. If interrupts are desired, set enable bit TXIE.
4. If 9-bit transmission is desired, set transmit bit TX9. Can be used as address/data bit.
5. Enable the transmission by setting bit TXEN, which will also set bit TXIF.
6. If 9-bit transmission is selected, the ninth bit should be loaded in bit TX9D.
7. Load data to the TXREG register (starts transmission).

FIGURE 15-1: USART TRANSMIT BLOCK DIAGRAM

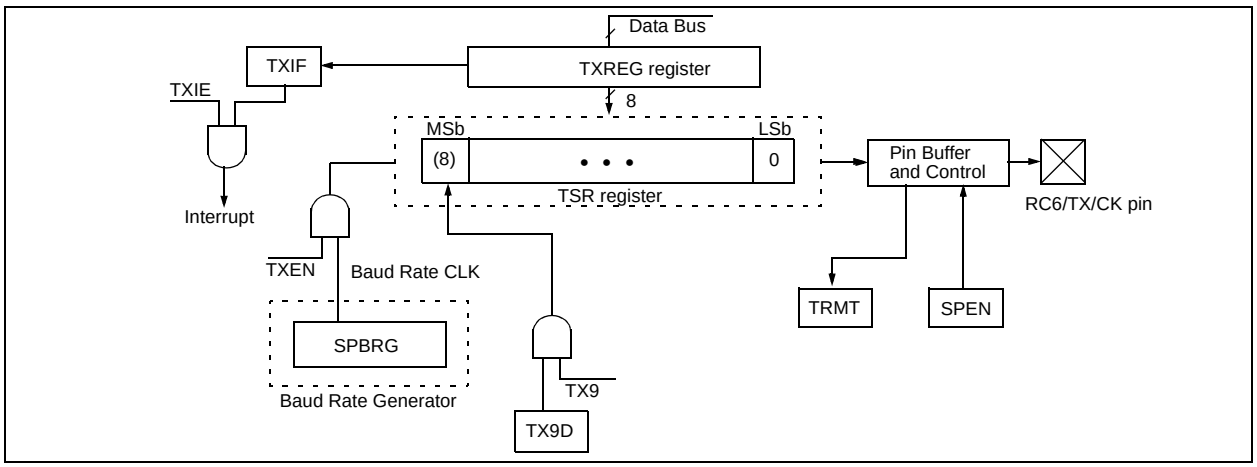

FIGURE 15-2: ASYNCHRONOUS TRANSMISSION

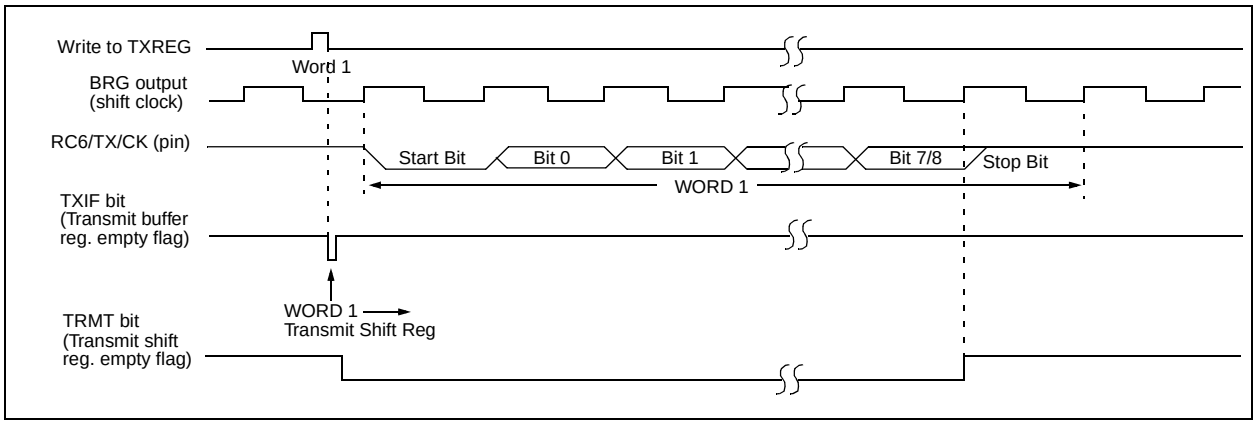

FIGURE 15-3: ASYNCHRONOUS TRANSMISSION (BACK TO BACK)

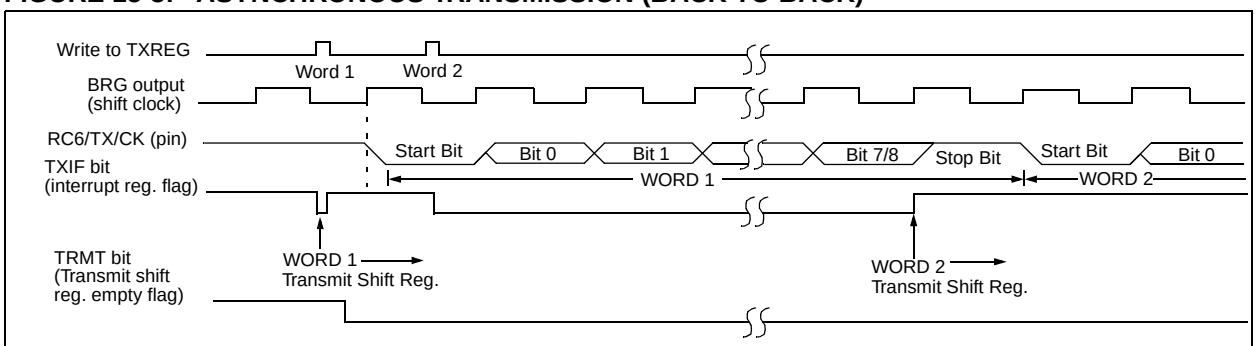

Note: This timing diagram shows two consecutive transmissions.

TABLE 15-6: REGISTERS ASSOCIATED WITH ASYNCHRONOUS TRANSMISSION

Name	Bit 7	Bit 6	Bit 5	Bit 4	Bit 3	Bit 2	Bit 1	Bit 0	Value on POR, BOR	Value on all other Resets
INTCON	GIE/GIEH	PEIE/ GIEL	TMR0IE	INT0IE	RBIE	TMR0IF	INT0IF	RBIF	0000 000x	0000 000u
PIR1	PSPIF(1)	ADIF	RCIF	TXIF	SSPIF	CCP1IF	TMR2IF	TMR1IF	0000 0000	0000 0000
PIE1	PSPIE(1)	ADIE	RCIE	TXIE	SSPIE	CCP1IE	TMR2IE	TMR1IE	0000 0000	0000 0000
IPR1	PSPIP(1)	ADIP	RCIP	TXIP	SSPIP	CCP1IP	TMR2IP	TMR1IP	0000 0000	0000 0000
RCSTA	SPEN	RX9	SREN	CREN	—	FERR	OERR	RX9D	0000 -00x	0000 -00x
TXREG	USART Transmit Register								0000 0000	0000 0000
TXSTA	CSRC	TX9	TXEN	SYNC	—	BRGH	TRMT	TX9D	0000 -010	0000 -010
SPBRG	Baud Rate Generator Register								0000 0000	0000 0000

Legend: x = unknown, - = unimplemented locations read as '0'.
Shaded cells are not used for Asynchronous Transmission.

Note 1: The PSPIF, PSPIE and PSPIP bits are reserved on the PIC18C2X2 devices. Always maintain these bits clear.

15.2.2 USART ASYNCHRONOUS RECEIVER

The receiver block diagram is shown in Figure 15-4. The data is received on the RC7/RX/DT pin and drives the data recovery block. The data recovery block is actually a high speed shifter operating at x16 times the baud rate, whereas the main receive serial shifter operates at the bit rate or at FOSC. This mode would typically be used in RS-232 systems.

Steps to follow when setting up an Asynchronous Reception:

1. Initialize the SPBRG register for the appropriate baud rate. If a high speed baud rate is desired, set bit BRGH. (Section 15.1).
2. Enable the asynchronous serial port by clearing bit SYNC and setting bit SPEN.
3. If interrupts are desired, set enable bit RCIE.
4. If 9-bit reception is desired, set bit RX9.
5. Enable the reception by setting bit CREN.
6. Flag bit RCIF will be set when reception is complete and an interrupt will be generated if enable bit RCIE was set.
7. Read the RCSTA register to get the ninth bit (if enabled) and determine if any error occurred during reception.
8. Read the 8-bit received data by reading the RCREG register.
9. If any error occurred, clear the error by clearing enable bit CREN.

15.2.3 SETTING UP 9-BIT MODE WITH ADDRESS DETECT

This mode would typically be used in RS-485 systems. Steps to follow when setting up an Asynchronous Reception with Address Detect Enable:

1. Initialize the SPBRG register for the appropriate baud rate. If a high speed baud rate is required, set the BRGH bit.
2. Enable the asynchronous serial port by clearing the SYNC bit and setting the SPEN bit.
3. If interrupts are required, set the RCEN bit and select the desired priority level with the RCIP bit.
4. Set the RX9 bit to enable 9-bit reception.
5. Set the ADDEN bit to enable address detect.
6. Enable reception by setting the CREN bit.
7. The RCIF bit will be set when reception is complete. The interrupt will be acknowledged if the RCIE and GIE bits are set.
8. Read the RCSTA register to determine if any error occurred during reception, as well as read bit 9 of data (if applicable).
9. Read RCREG to determine if the device is being addressed.
10. If any error occurred, clear the CREN bit.
11. If the device has been addressed, clear the ADDEN bit to allow all received data into the receive buffer and interrupt the CPU.

FIGURE 15-4: USART RECEIVE BLOCK DIAGRAM

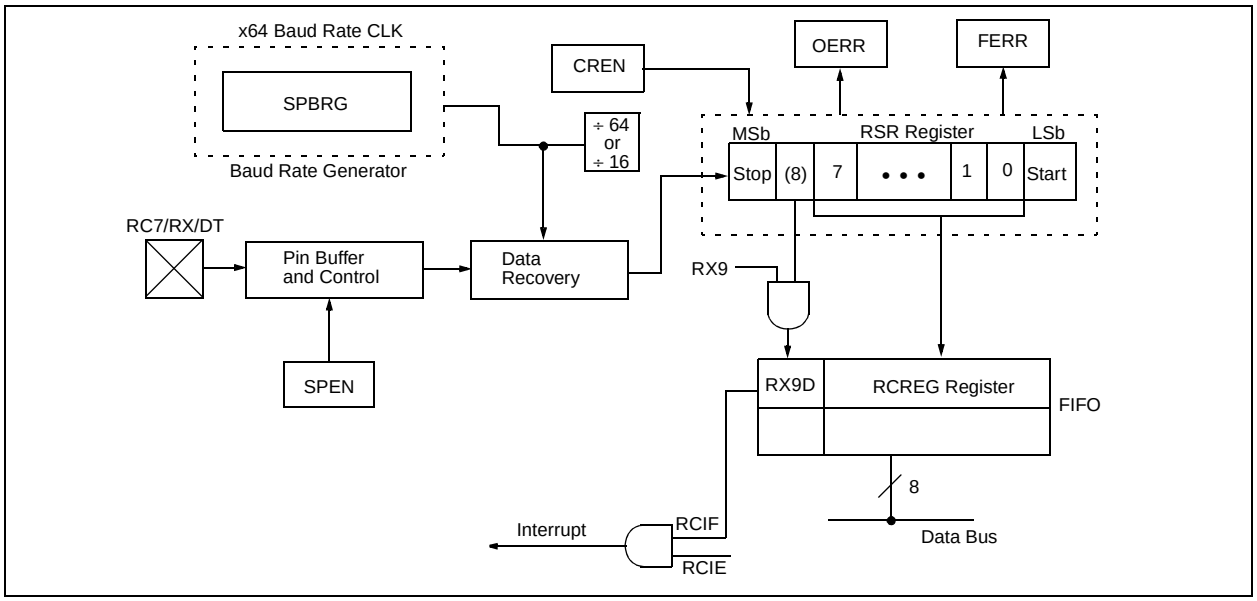

FIGURE 15-5: ASYNCHRONOUS RECEPTION

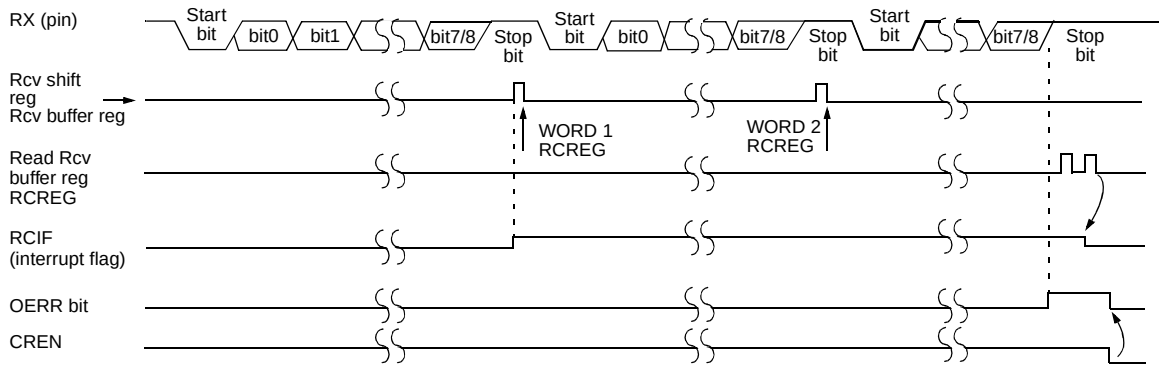

Note: This timing diagram shows three words appearing on the RX input. The RCREG (receive buffer) is read after the third word, causing the OERR (overrun) bit to be set.

TABLE 15-7: REGISTERS ASSOCIATED WITH ASYNCHRONOUS RECEPTION

Name	Bit 7	Bit 6	Bit 5	Bit 4	Bit 3	Bit 2	Bit 1	Bit 0	Value on POR, BOR	Value on all other Resets
INTCON	GIE/GIEH	PEIE/ GIEL	TMR0IE	INT0IE	RBIE	TMR0IF	INT0IF	RBIF	0000 000x	0000 000u
PIR1	PSPIF(1)	ADIF	RCIF	TXIF	SSPIF	CCP1IF	TMR2IF	TMR1IF	0000 0000	0000 0000
PIE1	PSPIE(1)	ADIE	RCIE	TXIE	SSPIE	CCP1IE	TMR2IE	TMR1IE	0000 0000	0000 0000
IPR1	PSPIP(1)	ADIP	RCIP	TXIP	SSPIP	CCP1IP	TMR2IP	TMR1IP	0000 0000	0000 0000
RCSTA	SPEN	RX9	SREN	CREN	—	FERR	OERR	RX9D	0000 -00x	0000 -00x
RCREG	USART Receive Register								0000 0000	0000 0000
TXSTA	CSRC	TX9	TXEN	SYNC	—	BRGH	TRMT	TX9D	0000 -010	0000 -010
SPBRG	Baud Rate Generator Register								0000 0000	0000 0000

Legend: x = unknown, - = unimplemented locations read as '0'.
Shaded cells are not used for Asynchronous Reception.

Note 1: The PSPIF, PSPIE and PSPIP bits are reserved on the PIC18C2X2 devices. Always maintain these bits clear.

15.3 USART Synchronous Master Mode

In Synchronous Master mode, the data is transmitted in a half-duplex manner, (i.e. transmission and reception do not occur at the same time). When transmitting data, the reception is inhibited and vice versa. Synchronous mode is entered by setting bit SYNC (TXSTA<4>). In addition, enable bit SPEN (RCSTA<7>) is set in order to configure the RC6/TX/CK and RC7/RX/DT I/O pins to CK (clock) and DT (data) lines respectively. The Master mode indicates that the processor transmits the master clock on the CK line. The Master mode is entered by setting bit CSRC (TXSTA<7>).

15.3.1 USART SYNCHRONOUS MASTER TRANSMISSION

The USART transmitter block diagram is shown in Figure 15-1. The heart of the transmitter is the transmit (serial) shift register (TSR). The shift register obtains its data from the read/write transmit buffer register TXREG. The TXREG register is loaded with data in software. The TSR register is not loaded until the last bit has been transmitted from the previous load. As soon as the last bit is transmitted, the TSR is loaded with new data from the TXREG (if available). Once the TXREG register transfers the data to the TSR register (occurs in one Tcycle), the TXREG is empty and interrupt bit TXIF (PIR1<4>) is set. The interrupt can be enabled/disabled by setting/clearing enable bit TXIE (PIE1<4>). Flag bit TXIF will be set, regardless of the state of enable bit TXIE, and cannot be cleared in software. It will reset only when new data is loaded into the TXREG register. While flag bit TXIF indicates the status of the TXREG register, another bit TRMT (TXSTA<1>) shows the status of the TSR register. TRMT is a read only bit, which is set when the TSR is empty. No interrupt logic is tied to this bit, so the user has to poll this bit in order to determine if the TSR register is empty. The TSR is not mapped in data memory, so it is not available to the user.

Steps to follow when setting up a Synchronous Master Transmission:

1. Initialize the SPBRG register for the appropriate baud rate (Section 15.1).
2. Enable the synchronous master serial port by setting bits SYNC, SPEN, and CSRC.
3. If interrupts are desired, set enable bit TXIE.
4. If 9-bit transmission is desired, set bit TX9.
5. Enable the transmission by setting bit TXEN.
6. If 9-bit transmission is selected, the ninth bit should be loaded in bit TX9D.
7. Start transmission by loading data to the TXREG register.

TABLE 15-8: REGISTERS ASSOCIATED WITH SYNCHRONOUS MASTER TRANSMISSION

Name	Bit 7	Bit 6	Bit 5	Bit 4	Bit 3	Bit 2	Bit 1	Bit 0	Value on POR, BOR	Value on all other Resets
INTCON	GIE/ GIEH	PEIE/ GIEL	TMR0IE	INT0IE	RBIE	TMR0IF	INT0IF	RBIF	0000 000x	0000 000u
PIR1	PSPIF(1)	ADIF	RCIF	TXIF	SSPIF	CCP1IF	TMR2IF	TMR1IF	0000 0000	0000 0000
PIE1	PSPIE(1)	ADIE	RCIE	TXIE	SSPIE	CCP1IE	TMR2IE	TMR1IE	0000 0000	0000 0000
IPR1	PSPIP(1)	ADIP	RCIP	TXIP	SSPIP	CCP1IP	TMR2IP	TMR1IP	0000 0000	0000 0000
RCSTA	SPEN	RX9	SREN	CREN	—	FERR	OERR	RX9D	0000 -00x	0000 -00x
TXREG	USART Transmit Register								0000 0000	0000 0000
TXSTA	CSRC	TX9	TXEN	SYNC	—	BRGH	TRMT	TX9D	0000 -010	0000 -010
SPBRG	Baud Rate Generator Register								0000 0000	0000 0000

Legend: x = unknown, — = unimplemented, read as '0'.
Shaded cells are not used for Synchronous Master Transmission.

Note 1: The PSPIF, PSPIE and PSPIP bits are reserved on the PIC18C2X2 devices. Always maintain these bits clear.

FIGURE 15-6: SYNCHRONOUS TRANSMISSION

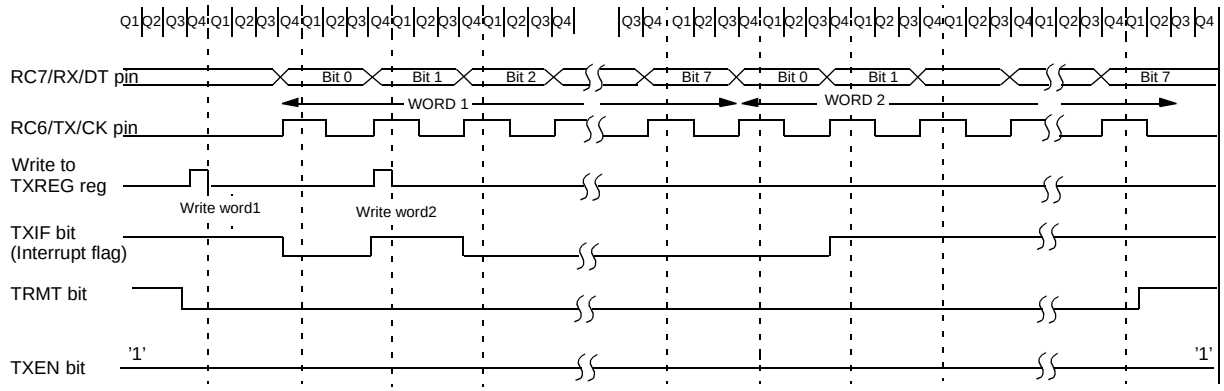

Note: Sync master mode; SPBRG = '0'. Continuous transmission of two 8-bit words

FIGURE 15-7: SYNCHRONOUS TRANSMISSION (THROUGH TXEN)

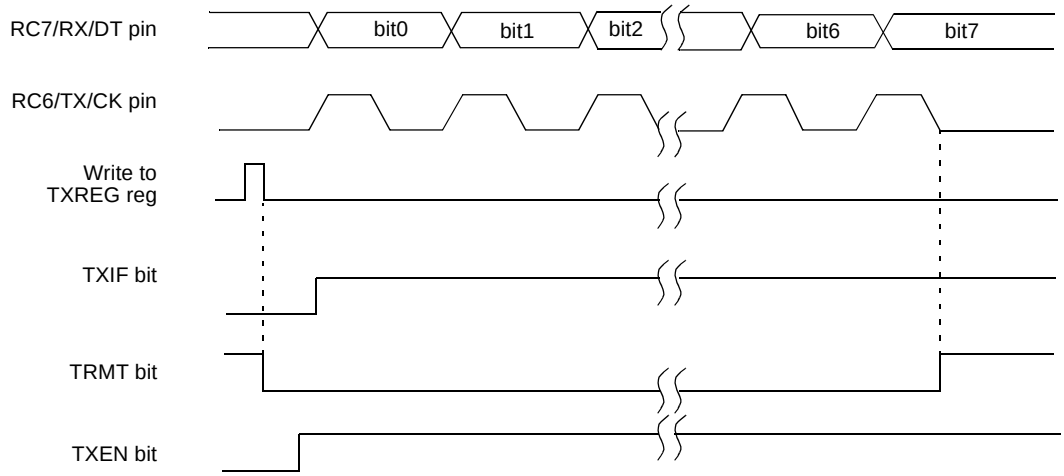

15.3.2 USART SYNCHRONOUS MASTER RECEPTION

Once synchronous mode is selected, reception is enabled by setting either enable bit SREN (RCSTA<5>) or enable bit CREN (RCSTA<4>). Data is sampled on the RC7/RX/DT pin on the falling edge of the clock. If enable bit SREN is set, only a single word is received. If enable bit CREN is set, the reception is continuous until CREN is cleared. If both bits are set, then CREN takes precedence.

Steps to follow when setting up a Synchronous Master Reception:

1. Initialize the SPBRG register for the appropriate baud rate. (Section 15.1)
2. Enable the synchronous master serial port by setting bits SYNC, SPEN and CSRC.
3. Ensure bits CREN and SREN are clear.
4. If interrupts are desired, set enable bit RCIE.
5. If 9-bit reception is desired, set bit RX9.
6. If a single reception is required, set bit SREN. For continuous reception, set bit CREN.
7. Interrupt flag bit RCIF will be set when reception is complete and an interrupt will be generated if the enable bit RCIE was set.
8. Read the RCSTA register to get the ninth bit (if enabled) and determine if any error occurred during reception.
9. Read the 8-bit received data by reading the RCREG register.
10. If any error occurred, clear the error by clearing bit CREN.

TABLE 15-9: REGISTERS ASSOCIATED WITH SYNCHRONOUS MASTER RECEPTION

Name	Bit 7	Bit 6	Bit 5	Bit 4	Bit 3	Bit 2	Bit 1	Bit 0	Value on POR, BOR	Value on all other Resets
INTCON	GIE/ GIEH	PEIE/ GIEL	TMR0IE	INT0IE	RBIE	TMR0IF	INT0IF	RBIF	0000 000x	0000 000u
PIR1	PSPIF(1)	ADIF	RCIF	TXIF	SSPIF	CCP1IF	TMR2IF	TMR1IF	0000 0000	0000 0000
PIE1	PSPIE(1)	ADIE	RCIE	TXIE	SSPIE	CCP1IE	TMR2IE	TMR1IE	0000 0000	0000 0000
IPR1	PSPIP(1)	ADIP	RCIP	TXIP	SSPIP	CCP1IP	TMR2IP	TMR1IP	0000 0000	0000 0000
RCSTA	SPEN	RX9	SREN	CREN	—	FERR	OERR	RX9D	0000 -00x	0000 -00x
RCREG	USART Receive Register								0000 0000	0000 0000
TXSTA	CSRC	TX9	TXEN	SYNC	—	BRGH	TRMT	TX9D	0000 -010	0000 -010
SPBRG	Baud Rate Generator Register								0000 0000	0000 0000

Legend: x = unknown, — = unimplemented read as '0'.
Shaded cells are not used for Synchronous Master Reception.

Note 1: The PSPIF, PSPIE and PSPIP bits are reserved on the PIC18C2X2 devices. Always maintain these bits clear.

FIGURE 15-8: SYNCHRONOUS RECEPTION (MASTER MODE, SREN)

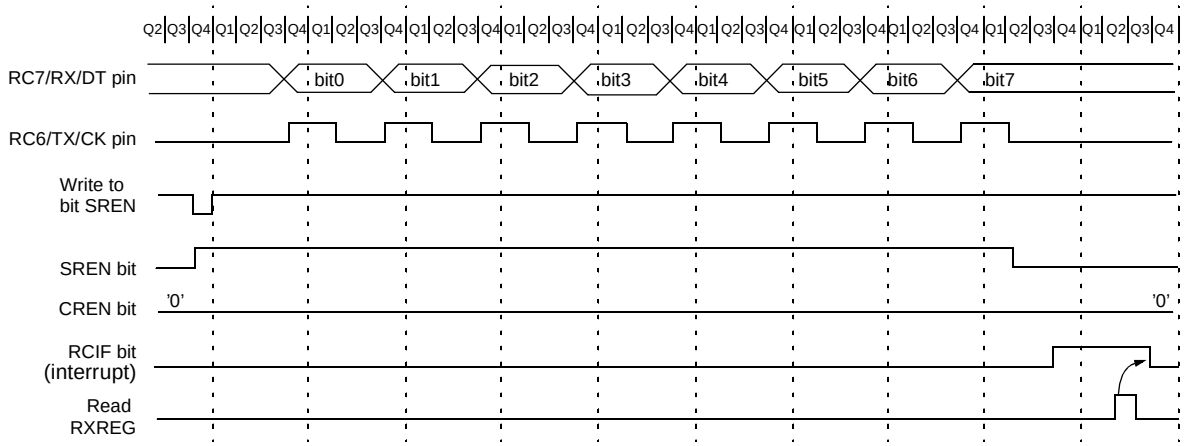

Note: Timing diagram demonstrates SYNC master mode with bit SREN = '1' and bit BRGH = '0'.

15.4 USART Synchronous Slave Mode

Synchronous Slave Mode differs from the Master Mode in the fact that the shift clock is supplied externally at the RC6/TX/CK pin (instead of being supplied internally in master mode). This allows the device to transfer or receive data while in SLEEP mode. Slave mode is entered by clearing bit CSRC (TXSTA<7>).

15.4.1 USART SYNCHRONOUS SLAVE TRANSMIT

The operation of the synchronous master and slave modes are identical, except in the case of the SLEEP mode.

If two words are written to the TXREG and then the SLEEP instruction is executed, the following will occur:

a) The first word will immediately transfer to the TSR register and transmit.
b) The second word will remain in TXREG register.
c) Flag bit TXIF will not be set.
d) When the first word has been shifted out of TSR, the TXREG register will transfer the second word to the TSR and flag bit TXIF will now be set.
e) If enable bit TXIE is set, the interrupt will wake the chip from SLEEP. If the global interrupt is enabled, the program will branch to the interrupt vector.

Steps to follow when setting up a Synchronous Slave Transmission:

1. Enable the synchronous slave serial port by setting bits SYNC and SPEN and clearing bit CSRC.
2. Clear bits CREN and SREN.
3. If interrupts are desired, set enable bit TXIE.
4. If 9-bit transmission is desired, set bit TX9.
5. Enable the transmission by setting enable bit TXEN.
6. If 9-bit transmission is selected, the ninth bit should be loaded in bit TX9D.
7. Start transmission by loading data to the TXREG register.

15.4.2 USART SYNCHRONOUS SLAVE RECEPTION

The operation of the synchronous master and slave modes is identical, except in the case of the SLEEP mode and bit SREN, which is a "don't care" in slave mode.

If receive is enabled by setting bit CREN prior to the SLEEP instruction, then a word may be received during SLEEP. On completely receiving the word, the RSR register will transfer the data to the RCREG register, and if enable bit RCIE bit is set, the interrupt generated will wake the chip from SLEEP. If the global interrupt is enabled, the program will branch to the interrupt vector.

Steps to follow when setting up a Synchronous Slave Reception:

1. Enable the synchronous master serial port by setting bits SYNC and SPEN and clearing bit CSRC.
2. If interrupts are desired, set enable bit RCIE.
3. If 9-bit reception is desired, set bit RX9.
4. To enable reception, set enable bit CREN.
5. Flag bit RCIF will be set when reception is complete. An interrupt will be generated if enable bit RCIE was set.
6. Read the RCSTA register to get the ninth bit (if enabled) and determine if any error occurred during reception.
7. Read the 8-bit received data by reading the RCREG register.
8. If any error occurred, clear the error by clearing bit CREN.

TABLE 15-10: REGISTERS ASSOCIATED WITH SYNCHRONOUS SLAVE TRANSMISSION

Name	Bit 7	Bit 6	Bit 5	Bit 4	Bit 3	Bit 2	Bit 1	Bit 0	Value on POR, BOR	Value on all other Resets
INTCON	GIE/ GIEH	PEIE/ GIEL	TMR0IE	INT0IE	RBIE	TMR0IF	INT0IF	RBIF	0000 000x	0000 000u
PIR1	PSPIF(1)	ADIF	RCIF	TXIF	SSPIF	CCP1IF	TMR2IF	TMR1IF	0000 0000	0000 0000
PIE1	PSPIE(1)	ADIE	RCIE	TXIE	SSPIE	CCP1IE	TMR2IE	TMR1IE	0000 0000	0000 0000
IPR1	PSPIP(1)	ADIP	RCIP	TXIP	SSPIP	CCP1IP	TMR2IP	TMR1IP	0000 0000	0000 0000
RCSTA	SPEN	RX9	SREN	CREN	—	FERR	OERR	RX9D	0000 -00x	0000 -00x
TXREG	USART Transmit Register								0000 0000	0000 0000
TXSTA	CSRC	TX9	TXEN	SYNC	—	BRGH	TRMT	TX9D	0000 -010	0000 -010
SPBRG	Baud Rate Generator Register								0000 0000	0000 0000

Legend: x = unknown, — = unimplemented read as '0'.
Shaded cells are not used for Synchronous Slave Transmission.

Note 1: The PSPIF, PSPIE and PSPIP bits are reserved on the PIC18C2X2 devices. Always maintain these bits clear.

TABLE 15-11: REGISTERS ASSOCIATED WITH SYNCHRONOUS SLAVE RECEPTION

Name	Bit 7	Bit 6	Bit 5	Bit 4	Bit 3	Bit 2	Bit 1	Bit 0	Value on POR, BOR	Value on all other Resets
INTCON	GIE/ GIEH	PEIE/ GIEL	TMR0IE	INT0IE	RBIE	TMR0IF	INT0IF	RBIF	0000 000x	0000 000u
PIR1	PSPIF(1)	ADIF	RCIF	TXIF	SSPIF	CCP1IF	TMR2IF	TMR1IF	0000 0000	0000 0000
PIE1	PSPIE(1)	ADIE	RCIE	TXIE	SSPIE	CCP1IE	TMR2IE	TMR1IE	0000 0000	0000 0000
IPR1	PSPIP(1)	ADIP	RCIP	TXIP	SSPIP	CCP1IP	TMR2IP	TMR1IP	0000 0000	0000 0000
RCSTA	SPEN	RX9	SREN	CREN	—	FERR	OERR	RX9D	0000 -00x	0000 -00x
RCREG	USART Receive Register								0000 0000	0000 0000
TXSTA	CSRC	TX9	TXEN	SYNC	—	BRGH	TRMT	TX9D	0000 -010	0000 -010
SPBRG	Baud Rate Generator Register								0000 0000	0000 0000

Legend: x = unknown, — = unimplemented read as '0'.
Shaded cells are not used for Synchronous Slave Reception.

Note 1: The PSPIF, PSPIE and PSPIP bits are reserved on the PIC18C2X2 devices. Always maintain these bits clear.

16.0 10-BIT ANALOG-TO-DIGITAL CONVERTER (A/D) MODULE

The analog-to-digital (A/D) converter module has five inputs for the PIC18C2x2 devices and eight for the PIC18C4x2 devices. This module has the ADCON0 and ADCON1 register definitions that are compatible with the mid-range A/D module.

The A/D allows conversion of an analog input signal to a corresponding 10-bit digital number.

The A/D module has four registers. These registers are:

- A/D Result High Register (ADRESH)
- A/D Result Low Register (ADRESL)
- A/D Control Register 0 (ADCON0)
- A/D Control Register 1 (ADCON1)

The ADCON0 register, shown in Register 16-1, controls the operation of the A/D module. The ADCON1 register, shown in Register 16-2, configures the functions of the port pins.

Register 16-1: ADCON0 Register

R/W-0	R/W-0	R/W-0	R/W-0	R/W-0	R/W-0	U-0	R/W-0
ADCS1	ADCS0	CHS2	CHS1	CHS0	GO/$\overline{\text{DONE}}$	—	ADON
bit 7							bit 0

bit 7:6 **ADCS1:ADCS0:** A/D Conversion Clock Select bits (shown in bold)

0**00** = FOSC/2
0**01** = FOSC/8
0**10** = FOSC/32
0**11** = FRC (clock derived from the internal A/D RC oscillator)
1**00** = FOSC/4
1**01** = FOSC/16
1**10** = FOSC/64
1**11** = FRC (clock derived from the internal A/D RC oscillator)

Note: The ADCS2 bit is located in the ADCON1 register

bit 5:3 **CHS2:CHS0:** Analog Channel Select bits

000 = channel 0, (AN0)
001 = channel 1, (AN1)
010 = channel 2, (AN2)
011 = channel 3, (AN3)
100 = channel 4, (AN4)
101 = channel 5, (AN5)
110 = channel 6, (AN6)
111 = channel 7, (AN7)

Note: The PIC18C2X2 devices do not implement the full 8 A/D channels, the unimplemented selections are reserved. Do not select any unimplemented channel.

bit 2 **GO/$\overline{\text{DONE}}$:** A/D Conversion Status bit

When ADON = 1

1 = A/D conversion in progress (setting this bit starts the A/D conversion which is automatically cleared by hardware when the A/D conversion is complete)

0 = A/D conversion not in progress

bit 1 **Unimplemented:** Read as ’0’

bit 0 **ADON:** A/D On bit

1 = A/D converter module is powered up
0 = A/D converter module is shut off and consumes no operating current

Legend:			
R = Readable bit	W = Writable bit	U = Unimplemented bit, read as ‘0’	
- n = Value at POR reset	’1’ = Bit is set	’0’ = Bit is cleared	x = Bit is unknown

Register 16-2: ADCON1 Register

R/W-0	R/W-0	U-0	U-0	R/W-0	R/W-0	R/W-0	R/W-0
ADFM	ADCS2	—	—	PCFG3	PCFG2	PCFG1	PCFG0
bit 7							bit 0

bit 7:6 **Unimplemented: Read as '0'**

bit 7 **ADFM:** A/D Result format select.

1 = Right justified. 6 Most Significant bits of ADRESH are read as '0'.
0 = Left justified. 6 Least Significant bits of ADRESL are read as '0'.

bit 6 **ADCS2:** A/D Conversion Clock Select bit (shown in bold)

000 = FOSC/2
001 = FOSC/8
010 = FOSC/32
011 = FRC (clock derived from the internal A/D RC oscillator)
100 = FOSC/4
101 = FOSC/16
110 = FOSC/64
111 = FRC (clock derived from the internal A/D RC oscillator)

Note: The ADCS1:ADCS0 bits are located in the ADCON0 register

bit 5:4 **Unimplemented: Read as '0'**

bit 3:0 **PCFG3:PCFG0:** A/D Port Configuration Control bits

PCFG	AN7	AN6	AN5	AN4	AN3	AN2	AN1	AN0	VREF+	VREF-	C / R
0000	A	A	A	A	A	A	A	A	VDD	VSS	8 / 0
0001	A	A	A	A	VREF+	A	A	A	AN3	VSS	7 / 1
0010	D	D	D	A	A	A	A	A	VDD	VSS	5 / 0
0011	D	D	D	A	VREF+	A	A	A	AN3	VSS	4 / 1
0100	D	D	D	D	A	D	A	A	VDD	VSS	3 / 0
0101	D	D	D	D	VREF+	D	A	A	AN3	VSS	2 / 1
011x	D	D	D	D	D	D	D	D	—	—	0 / 0
1000	A	A	A	A	VREF+	VREF-	A	A	AN3	AN2	6 / 2
1001	D	D	A	A	A	A	A	A	VDD	VSS	6 / 0
1010	D	D	A	A	VREF+	A	A	A	AN3	VSS	5 / 1
1011	D	D	A	A	VREF+	VREF-	A	A	AN3	AN2	4 / 2
1100	D	D	D	A	VREF+	VREF-	A	A	AN3	AN2	3 / 2
1101	D	D	D	D	VREF+	VREF-	A	A	AN3	AN2	2 / 2
1110	D	D	D	D	D	D	D	A	VDD	VSS	1 / 0
1111	D	D	D	D	VREF+	VREF-	D	A	AN3	AN2	1 / 2

A = Analog input D = Digital I/O
C/R = # of analog input channels / # of A/D voltage references

Legend:			
R = Readable bit	W = Writable bit	U = Unimplemented bit, read as '0'	
- n = Value at POR reset	'1' = Bit is set	'0' = Bit is cleared	x = Bit is unknown

Note: On any device reset, the port pins that are multiplexed with analog functions (ANx) are forced to be an analog input.

The analog reference voltage is software selectable to either the device's positive and negative supply voltage (V_{DD} and V_{SS}) or the voltage level on the RA3/AN3/V_{REF}+ pin and RA2/AN2/V_{REF}-.

The A/D converter has a unique feature of being able to operate while the device is in SLEEP mode. To operate in sleep, the A/D conversion clock must be derived from the A/D's internal RC oscillator.

The output of the sample and hold is the input into the converter, which generates the result via successive approximation.

A device reset forces all registers to their reset state. This forces the A/D module to be turned off and any conversion is aborted.

Each port pin associated with the A/D converter can be configured as an analog input (RA3 can also be a voltage reference) or as a digital I/O.

The ADRESH and ADRESL registers contain the result of the A/D conversion. When the A/D conversion is complete, the result is loaded into the ADRESH/ADRESL registers, the GO/$\overline{\text{DONE}}$ bit (ADCON0<2>) is cleared, and A/D interrupt flag bit ADIF is set. The block diagram of the A/D module is shown in Figure 16-1.

FIGURE 16-1: A/D BLOCK DIAGRAM

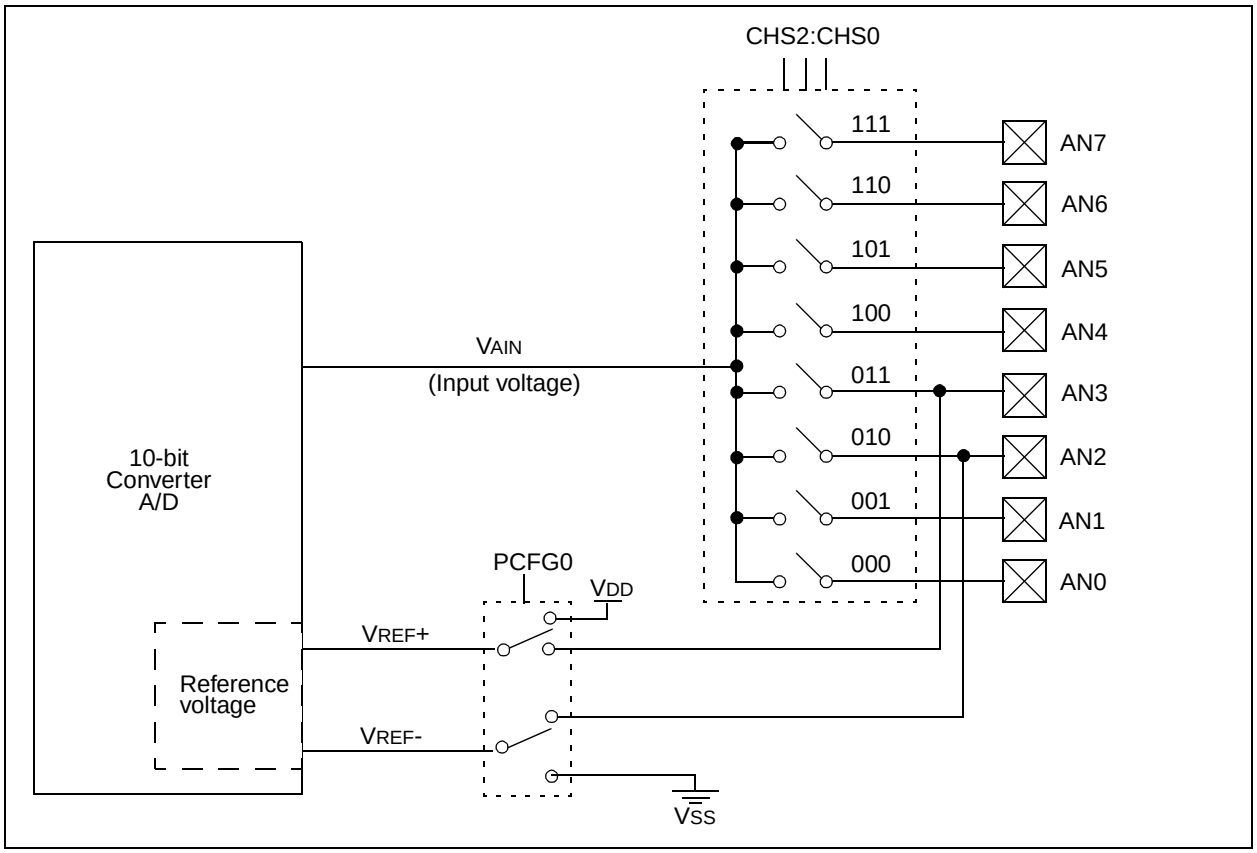

The value that is in the ADRESH/ADRESL registers is not modified for a Power-on Reset. The ADRESH/ADRESL registers will contain unknown data after a Power-on Reset.

After the A/D module has been configured as desired, the selected channel must be acquired before the conversion is started. The analog input channels must have their corresponding TRIS bits selected as an input. To determine acquisition time, see Section 16.1. After this acquisition time has elapsed, the A/D conversion can be started. The following steps should be followed for doing an A/D conversion:

1. Configure the A/D module:
   - Configure analog pins, voltage reference and digital I/O (ADCON1)
   - Select A/D input channel (ADCON0)
   - Select A/D conversion clock (ADCON0)
   - Turn on A/D module (ADCON0)
2. Configure A/D interrupt (if desired):
   - Clear ADIF bit
   - Set ADIE bit
   - Set GIE bit
3. Wait the required acquisition time.
4. Start conversion:
   - Set GO/$\overline{\text{DONE}}$ bit (ADCON0)
5. Wait for A/D conversion to complete, by either:
   - Polling for the GO/$\overline{\text{DONE}}$ bit to be cleared

   OR
   - Waiting for the A/D interrupt
6. Read A/D Result registers (ADRESH/ADRESL); clear bit ADIF if required.
7. For next conversion, go to step 1 or step 2 as required. The A/D conversion time per bit is defined as TAD. A minimum wait of 2TAD is required before next acquisition starts.

16.1 A/D Acquisition Requirements

For the A/D converter to meet its specified accuracy, the charge holding capacitor (CHOLD) must be allowed to fully charge to the input channel voltage level. The analog input model is shown in Figure 16-2. The source impedance (RS) and the internal sampling switch (RSS) impedance directly affect the time required to charge the capacitor CHOLD. The sampling switch (RSS) impedance varies over the device voltage (VDD). The source impedance affects the offset voltage at the analog input (due to pin leakage current). **The maximum recommended impedance for analog sources is 2.5kΩ.** After the analog input channel is selected (changed), this acquisition must be done before the conversion can be started.

> **Note:** When the conversion is started, the holding capacitor is disconnected from the input pin.

FIGURE 16-2: ANALOG INPUT MODEL

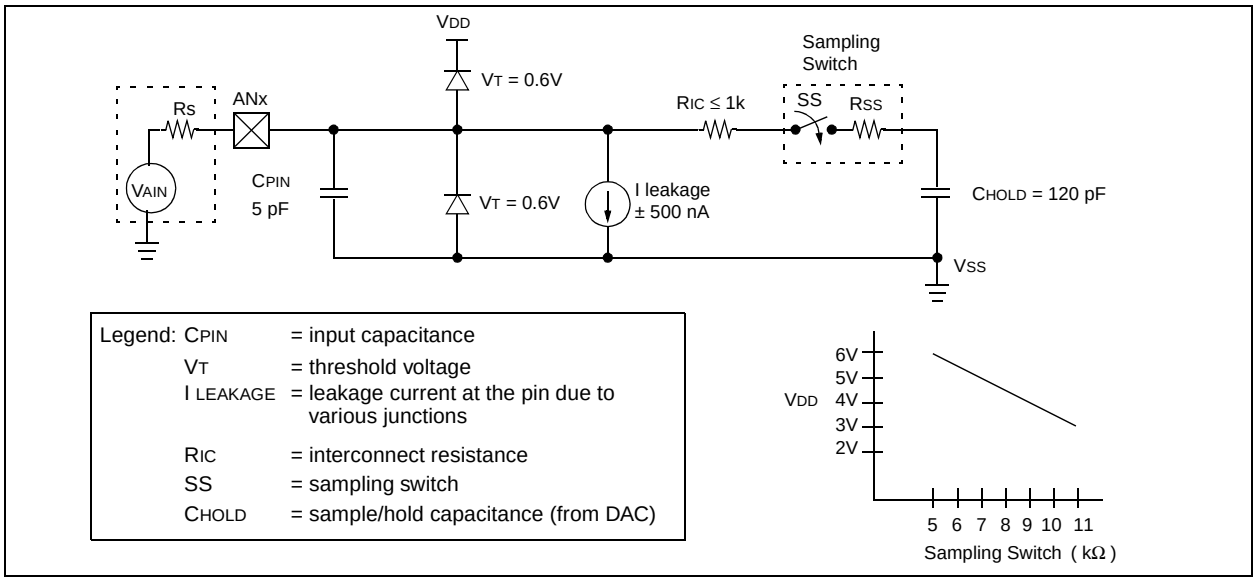

To calculate the minimum acquisition time, Equation 16-1 may be used. This equation assumes that 1/2 LSb error is used (1024 steps for the A/D). The 1/2 LSb error is the maximum error allowed for the A/D to meet its specified resolution.

Equation 16-1: Acquisition Time

$$T_{ACQ} = \text{Amplifier Settling Time} + \text{Holding Capacitor Charging Time} + \text{Temperature Coefficient}$$
$$= T_{AMP} + T_C + T_{COFF}$$

Equation 16-2: A/D Minimum Charging Time

$$V_{HOLD} = (V_{REF} - (V_{REF}/2048)) \bullet (1 - e^{(-T_C/C_{HOLD}(R_{IC} + R_{SS} + R_S))})$$

or

$$T_C = -(120\text{ pF})(1\text{ k}\Omega + R_{SS} + R_S)\ln(1/2047)$$

Example 16-3 shows the calculation of the minimum required acquisition time T_{ACQ}. This calculation is based on the following application system assumptions:

C_{HOLD}	=	120 pF
Rs	=	2.5 kΩ
Conversion Error	≤	1/2 LSb
V_{DD}	=	5V → Rss = 7 kΩ
Temperature	=	50°C (system max.)
V_{HOLD}	=	0V @ time = 0

EXAMPLE 16-3: CALCULATING THE MINIMUM REQUIRED ACQUISITION TIME

$T_{ACQ} = T_{AMP} + T_C + T_{COFF}$

Temperature coefficient is only required for temperatures > 25°C.

$T_{ACQ} = 2\ \mu s + T_C + [(Temp - 25°C)(0.05\ \mu s/°C)]$

$T_C = -C_{HOLD}(R_{IC} + R_{SS} + R_S)\ln(1/2047)$
$-120\text{ pF}(1\text{ k}\Omega + 7\text{ k}\Omega + 2.5\text{ k}\Omega)\ln(0.0004885)$
$-120\text{ pF}(10.5\text{ k}\Omega)\ln(0.0004885)$
$-1.26\ \mu s(-7.6241)$
$9.61\ \mu s$

$T_{ACQ} = 2\ \mu s + 9.61\ \mu s + [(50°C - 25°C)(0.05\ \mu s/°C)]$
$11.61\ \mu s + 1.25\ \mu s$
$12.86\ \mu s$

16.2 Selecting the A/D Conversion Clock

The A/D conversion time per bit is defined as TAD. The A/D conversion requires 12 TAD per 10-bit conversion. The source of the A/D conversion clock is software selectable. The seven possible options for TAD are:

- 2TOSC
- 4TOSC
- 8TOSC
- 16TOSC
- 32TOSC
- 64TOSC
- Internal RC oscillator

For correct A/D conversions, the A/D conversion clock (TAD) must be selected to ensure a minimum TAD time of 1.6 µs.

Table 16-1 shows the resultant TAD times derived from the device operating frequencies and the A/D clock source selected.

16.3 Configuring Analog Port Pins

The ADCON1, TRISA and TRISE registers control the operation of the A/D port pins. The port pins that are desired as analog inputs must have their corresponding TRIS bits set (input). If the TRIS bit is cleared (output), the digital output level (VOH or VOL) will be converted.

The A/D operation is independent of the state of the CHS2:CHS0 bits and the TRIS bits.

Note 1: When reading the port register, all pins configured as analog input channels will read as cleared (a low level). Pins configured as digital inputs will convert an analog input. Analog levels on a digitally configured input will not affect the conversion accuracy.

Note 2: Analog levels on any pin that is defined as a digital input (including the AN4:AN0 pins) may cause the input buffer to consume current that is out of the devices specification.

TABLE 16-1: TAD VS. DEVICE OPERATING FREQUENCIES

AD Clock Source (TAD)		Device Frequency			
Operation	**ADCS2:ADCS0**	**20 MHz**	**5 MHz**	**1.25 MHz**	**333.33 kHz**
2TOSC	000	100 ns(2)	400 ns(2)	1.6 µs	6 µs
4TOSC	100	200 ns(2)	800 ns(2)	3.2 µs	12 µs
8TOSC	001	400 ns(2)	1.6 µs	6.4 µs	24 µs(3)
16TOSC	101	800 ns(2)	3.2 µs	12.8 µs	48 µs(3)
32TOSC	010	1.6 µs	6.4 µs	25.6 µs(3)	96 µs(3)
64TOSC	110	3.2 µs	12.8 µs	51.2 µs(3)	192 µs(3)
RC	011	2 - 6 µs(1,4)	2 - 6 µs(1,4)	2 - 6 µs(1,4)	2 - 6 µs(1)

Legend: Shaded cells are outside of recommended range.
Note 1: The RC source has a typical TAD time of 4 µs.
2: These values violate the minimum required TAD time.
3: For faster conversion times, the selection of another clock source is recommended.
4: For device frequencies above 1 MHz, the device must be in SLEEP for the entire conversion or the A/D accuracy may be out of specification.

TABLE 16-2: TAD VS. DEVICE OPERATING FREQUENCIES (FOR EXTENDED, LC, DEVICES)

AD Clock Source (TAD)		Device Frequency			
Operation	**ADCS2:ADCS0**	**4 MHz**	**2 MHz**	**1.25 MHz**	**333.33 kHz**
2TOSC	000	500 ns(2)	1.0 µs(2)	1.6 µs(2)	6 µs
4TOSC	100	1.0 µs(2)	2.0 µs(2)	3.2 µs(2)	12 µs
8TOSC	001	2.0 µs(2)	4.0 µs	6.4 µs	24 µs(3)
16TOSC	101	4.0 µs(2)	8.0 µs	12.8 µs	48 µs(3)
32TOSC	010	8.0 µs	16.0 µs	25.6 µs(3)	96 µs(3)
64TOSC	110	16.0 µs	32.0 µs	51.2 µs(3)	192 µs(3)
RC	011	3 - 9 µs(1,4)	3 - 9 µs(1,4)	3 - 9 µs(1,4)	3 - 9 µs(1,4)

Legend: Shaded cells are outside of recommended range.
Note 1: The RC source has a typical TAD time of 6 µs.
2: These values violate the minimum required TAD time.
3: For faster conversion times, the selection of another clock source is recommended.
4: For device frequencies above 1 MHz, the device must be in SLEEP for the entire conversion or the A/D accuracy may be out of specification.

16.4 A/D Conversions

Figure 16-3 shows the operation of the A/D converter after the GO bit has been set. Clearing the GO/$\overline{\text{DONE}}$ bit during a conversion will abort the current conversion. The A/D result register pair will NOT be updated with the partially completed A/D conversion sample. That is, the ADRESH:ADRESL registers will continue to contain the value of the last completed conversion (or the last value written to the ADRESH:ADRESL registers). After the A/D conversion is aborted, a 2TAD wait is required before the next acquisition is started. After this 2TAD wait, acquisition on the selected channel is automatically started.

Note:	The GO/$\overline{\text{DONE}}$ bit should **NOT** be set in the same instruction that turns on the A/D.

16.5 Use of the CCP2 Trigger

An A/D conversion can be started by the “special event trigger” of the CCP2 module. This requires that the CCP2M3:CCP2M0 bits (CCP2CON<3:0>) be programmed as 1011 and that the A/D module is enabled (ADON bit is set). When the trigger occurs, the GO/$\overline{\text{DONE}}$ bit will be set, starting the A/D conversion, and the Timer1 (or Timer3) counter will be reset to zero. Timer1 (or Timer3) is reset to automatically repeat the A/D acquisition period with minimal software overhead (moving ADRESH/ADRESL to the desired location). The appropriate analog input channel must be selected and the minimum acquisition done before the “special event trigger” sets the GO/$\overline{\text{DONE}}$ bit (starts a conversion).

If the A/D module is not enabled (ADON is cleared), the “special event trigger” will be ignored by the A/D module, but will still reset the Timer1 (or Timer3) counter.

FIGURE 16-3: A/D CONVERSION TAD CYCLES

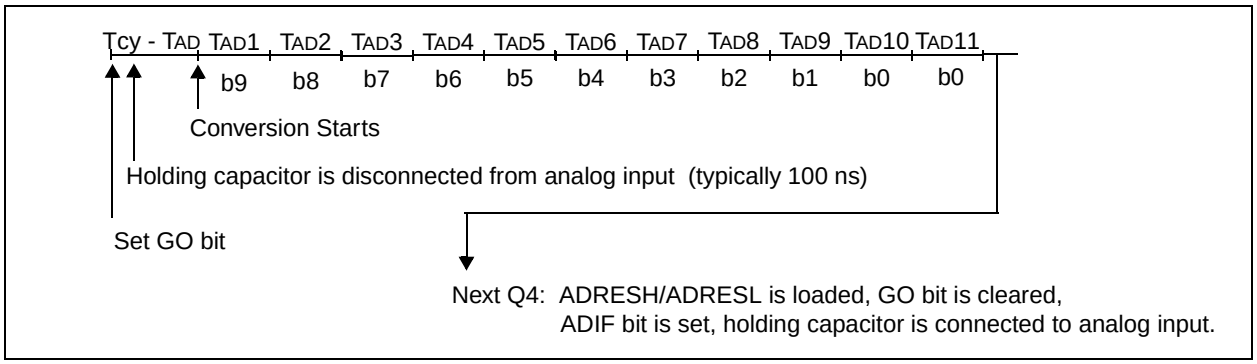

TABLE 16-3: SUMMARY OF A/D REGISTERS

Name	Bit 7	Bit 6	Bit 5	Bit 4	Bit 3	Bit 2	Bit 1	Bit 0	Value on POR, BOR	Value on all other Resets
INTCON	GIE/ GIEH	PEIE/ GIEL	TMR0IE	INT0IE	RBIE	TMR0IF	INT0IF	RBIF	0000 000x	0000 000u
PIR1	PSPIF(1)	ADIF	RCIF	TXIF	SSPIF	CCP1IF	TMR2IF	TMR1IF	0000 0000	0000 0000
PIE1	PSPIE(1)	ADIE	RCIE	TXIE	SSPIE	CCP1IE	TMR2IE	TMR1IE	0000 0000	0000 0000
IPR1	PSPIP(1)	ADIP	RCIP	TXIP	SSPIP	CCP1IP	TMR2IP	TMR1IP	0000 0000	0000 0000
PIR2	—	—	—	—	BCLIF	LVDIF	TMR3IF	CCP2IF	---- 0000	---- 0000
PIE2	—	—	—	—	BCLIE	LVDIE	TMR3IE	CCP2IE	---- 0000	---- 0000
IPR2	—	—	—	—	BCLIP	LVDIP	TMR3IP	CCP2IP	---- 0000	---- 0000
ADRESH	A/D Result Register								xxxx xxxx	uuuu uuuu
ADRESL	A/D Result Register								xxxx xxxx	uuuu uuuu
ADCON0	ADCS1	ADCS0	CHS2	CHS1	CHS0	GO/ $\overline{\text{DONE}}$	—	ADON	0000 00-0	0000 00-0
ADCON1	ADFM	ADCS2	—	—	PCFG3	PCFG2	PCFG1	PCFG0	---- -000	---- -000
PORTA	—	RA6	RA5	RA4	RA3	RA2	RA1	RA0	--0x 0000	--0u 0000
TRISA	—	PORTA Data Direction Register							--11 1111	--11 1111
PORTE	—	—	—	—	—	RE2	RE1	RE0	---- -000	---- -000
LATE	—	—	—	—	—	LATE2	LATE1	LATE0	---- -xxx	---- -uuu
TRISE	IBF	OBF	IBOV	PSPMODE	—	PORTE Data Direction Bits			0000 -111	0000 -111

Legend: x = unknown, u = unchanged, — = unimplemented read as ’0’. Shaded cells are not used for A/D conversion.
Note 1: The PSPIF, PSPIE and PSPIP bits are reserved on the PIC18C2X2 devices. Always maintain these bits clear.

17.0 LOW VOLTAGE DETECT

In many applications, the ability to determine if the device voltage (V_{DD}) is below a specified voltage level is a desirable feature. A window of operation for the application can be created, where the application software can do "housekeeping tasks" before the device voltage exits the valid operating range. This can be done using the Low Voltage Detect module.

This module is a software programmable circuitry, where a device voltage trip point can be specified. When the voltage of the device becomes lower then the specified point, an interrupt flag is set. If the interrupt is enabled, the program execution will branch to the interrupt vector address and the software can then respond to that interrupt source.

The Low Voltage Detect circuitry is completely under software control. This allows the circuitry to be "turned off" by the software, which minimizes the current consumption for the device.

Figure 17-1 shows a possible application voltage curve (typically for batteries). Over time, the device voltage decreases. When the device voltage equals voltage V_A, the LVD logic generates an interrupt. This occurs at time T_A. The application software then has the time until the device voltage is no longer in valid operating range to shut down the system. Voltage point V_B is the minimum valid operating voltage specification. This occurs at time T_B. T_B - T_A is the total time for shutdown.

FIGURE 17-1: TYPICAL LOW VOLTAGE DETECT APPLICATION

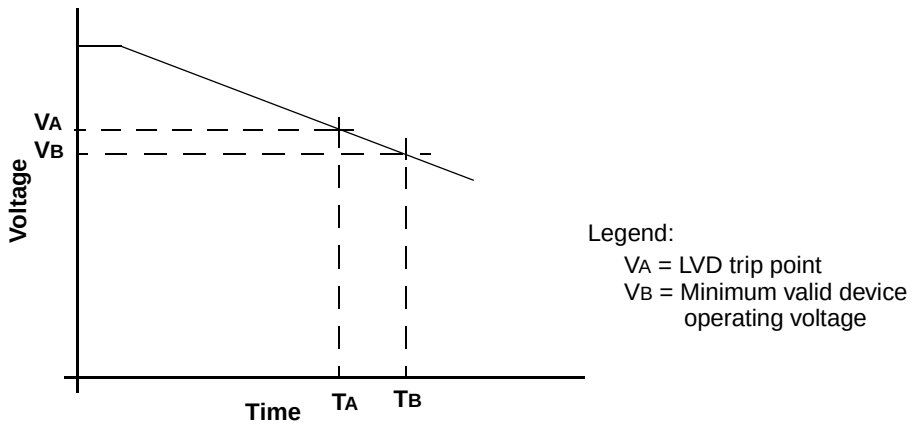

Figure 17-2 shows the block diagram for the LVD module. A comparator uses an internally generated reference voltage as the set point. When the selected tap output of the device voltage crosses the set point (is lower than), the LVDIF bit is set.

Each node in the resister divider represents a “trip point” voltage. The “trip point” voltage is the minimum supply voltage level at which the device can operate before the LVD module asserts an interrupt. When the supply voltage is equal to the trip point, the voltage tapped off of the resistor array is equal to the voltage generated by the internal voltage reference module. The comparator then generates an interrupt signal setting the LVDIF bit. This voltage is software programmable to any one of 16 values (See Figure 17-2). The trip point is selected by programming the LVDL3:LVDL0 bits (LVDCON<3:0>).

FIGURE 17-2: LOW VOLTAGE DETECT (LVD) BLOCK DIAGRAM

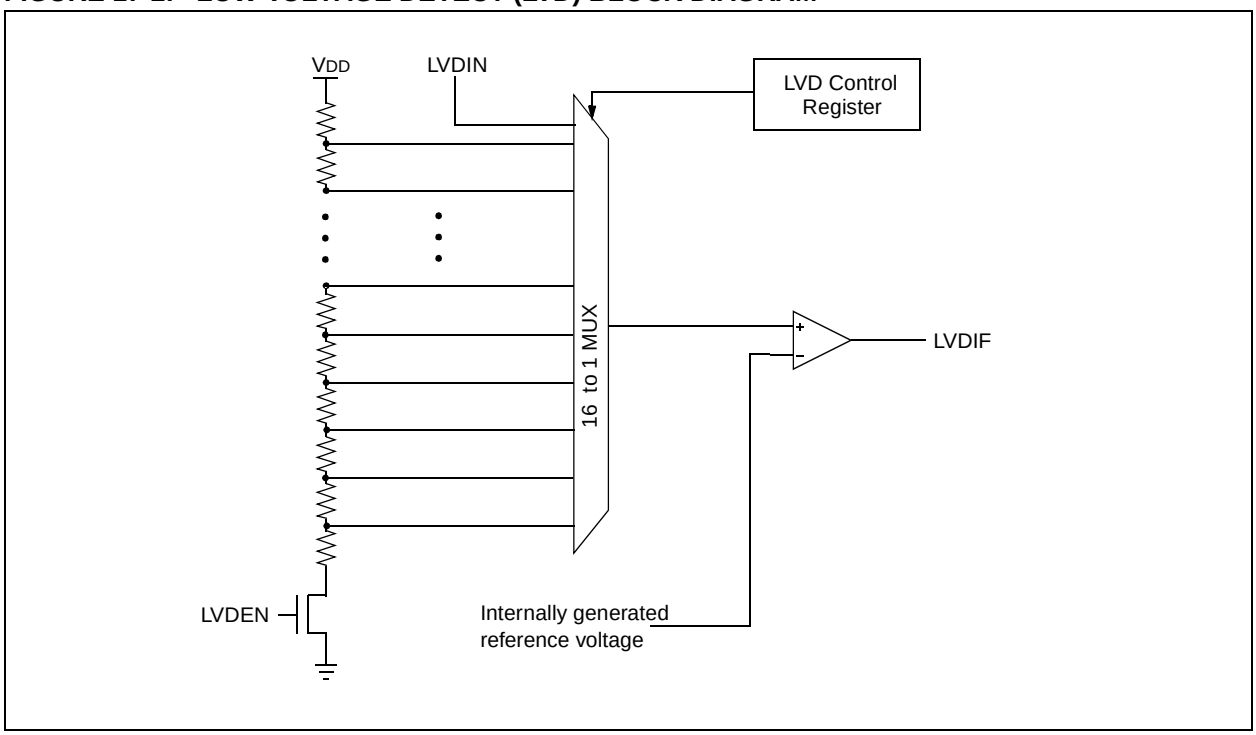

17.1 Control Register

The Low Voltage Detect Control register controls the operation of the Low Voltage Detect circuitry.

Register 17-1: LVDCON Register

U-0	U-0	R-0	R/W-0	R/W-0	R/W-1	R/W-0	R/W-1
—	—	IRVST	LVDEN	LVDL3	LVDL2	LVDL1	LVDL0
bit 7							bit 0

bit 7:6 **Unimplemented:** Read as ’0’

bit 5 **IRVST:** Internal Reference Voltage Stable Flag bit

1 = Indicates that the Low Voltage Detect logic will generate the interrupt flag at the specified voltage range.
0 = Indicates that the Low Voltage Detect logic will not generate the interrupt flag at the specified voltage range and the LVD interrupt should not be enabled

bit 4 **LVDEN:** Low-voltage Detect Power Enable bit

1 = Enables LVD, powers up LVD circuit
0 = Disables LVD, powers down LVD circuit

bit 3:0 **LVDL3:LVDL0:** Low Voltage Detection Limit bits

1111 = External analog input is used (input comes from the LVDIN pin)
1110 = 4.5V min - 4.77V max.
1101 = 4.2V min - 4.45V max.
1100 = 4.0V min - 4.24V max.
1011 = 3.8V min - 4.03V max.
1010 = 3.6V min - 3.82V max.
1001 = 3.5V min - 3.71V max.
1000 = 3.3V min - 3.50V max.
0111 = 3.0V min - 3.18V max.
0110 = 2.8V min - 2.97V max.
0101 = 2.7V min - 2.86V max.
0100 = 2.5V min - 2.65V max.
0011 = 2.4V min - 2.54V max.
0010 = 2.2V min - 2.33V max.
0001 = 2.0V min - 2.12V max.
0000 = 1.8V min - 1.91V max.

Note: LVDL3:LVDL0 modes which result in a trip point below the valid operating voltage of the device are not tested.

Legend:		
R = Readable bit	W = Writable bit	
U = Unimplemented bit, read as ‘0’		- n = Value at POR reset

17.2 Operation

Depending on the power source for the device voltage, the voltage normally decreases relatively slowly. This means that the LVD module does not need to be constantly operating. To decrease the current requirements, the LVD circuitry only needs to be enabled for short periods, where the voltage is checked. After doing the check, the LVD module may be disabled.

Each time that the LVD module is enabled, the circuitry requires some time to stabilize. After the circuitry has stabilized, all status flags may be cleared. The module will then indicate the proper state of the system.

The following steps are needed to setup the LVD module:

1. Write the value to the LVDL3:LVDL0 bits (LVDCON register), which selects the desired LVD Trip Point.
2. Ensure that LVD interrupts are disabled (the LVDIE bit is cleared or the GIE bit is cleared).
3. Enable the LVD module (Set the LVDEN bit in the LVDCON register).
4. Wait for the LVD module to stabilize (the IRVST bit to become set).
5. Clear the LVD interrupt flag, which may have falsely become set until the LVD module has stabilized (clear the LVDIF bit).
6. Enable the LVD interrupt (set the LVDIE and the GIE bits).

Figure 17-3 shows typical waveforms that the LVD module may be used to detect.

FIGURE 17-3: LOW VOLTAGE DETECT WAVEFORMS

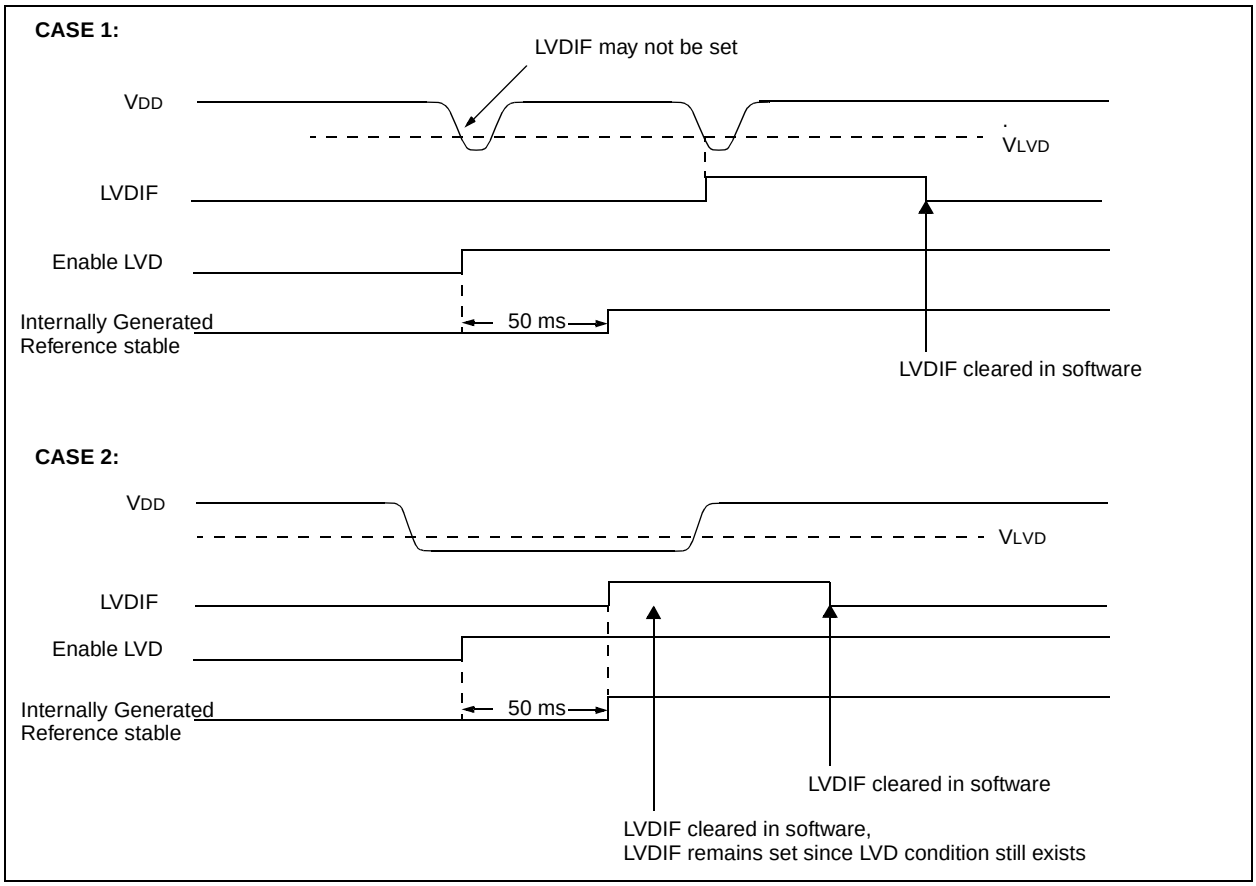

17.2.1 REFERENCE VOLTAGE SET POINT

The Internal Reference Voltage of the LVD module may be used by other internal circuitry (the programmable brown-out reset). If these circuits are disabled (lower current consumption), the reference voltage circuit requires a time to become stable before a low voltage condition can be reliably detected. This time is invariant of system clock speed. This start-up time is specified in electrical specification parameter #36. The low-voltage interrupt flag will not be enabled until a stable reference voltage is reached. Refer to the waveform in Figure 17-3.

17.2.2 CURRENT CONSUMPTION

When the module is enabled, the LVD comparator and voltage divider are enabled and will consume static current. The voltage divider can be tapped from multiple places in the resistor array. Total current consumption, when enabled, is specified in electrical specification parameter #D022B.

17.3 Operation During Sleep

When enabled, the LVD circuitry continues to operate during sleep. If the device voltage crosses the trip point, the LVDIF bit will be set and the device will wake-up from sleep. Device execution will continue from the interrupt vector address if interrupts have been globally enabled.

17.4 Effects of a Reset

A device reset forces all registers to their reset state. This forces the LVD module to be turned off.

NOTES:

18.0 SPECIAL FEATURES OF THE CPU

There are several features intended to maximize system reliability, minimize cost through elimination of external components, provide power saving operating modes and offer code protection. These are:

- OSC Selection
- Reset
  - Power-on Reset (POR)
  - Power-up Timer (PWRT)
  - Oscillator Start-up Timer (OST)
  - Brown-out Reset (BOR)
- Interrupts
- Watchdog Timer (WDT)
- SLEEP
- Code protection
- ID locations
- In-circuit serial programming

These devices have a Watchdog Timer, which is permanently enabled via the configuration bits or software-controlled. It runs off its own RC oscillator for added reliability. There are two timers that offer necessary delays on power-up. One is the Oscillator Start-up Timer (OST), intended to keep the chip in reset until the crystal oscillator is stable. The other is the Power-up Timer (PWRT), which provides a fixed delay on power-up only, designed to keep the part in reset while the power supply stabilizes. With these two timers on-chip, most applications need no external reset circuitry.

SLEEP mode is designed to offer a very low current power-down mode. The user can wake-up from SLEEP through external reset, Watchdog Timer Wake-up or through an interrupt. Several oscillator options are also made available to allow the part to fit the application. The RC oscillator option saves system cost, while the LP crystal option saves power. A set of configuration bits are used to select various options.

18.1 Configuration Bits

The configuration bits can be programmed (read as '0') or left unprogrammed (read as '1') to select various device configurations. These bits are mapped starting at program memory location 300000h.

The user will note that address 300000h is beyond the user program memory space. In fact, it belongs to the configuration memory space (300000h - 3FFFFFh), which can only be accessed using table reads and table writes.

TABLE 18-1: CONFIGURATION BITS AND DEVICE IDS

Filename		Bit 7	Bit 6	Bit 5	Bit 4	Bit 3	Bit 2	Bit 1	Bit 0	Default/ unprogrammed value
300000h	CONFIG1L	CP	CP	CP	CP	CP	CP	CP	CP	1111 1111
300001h	CONFIG1H	—	—	$\overline{\text{OSCSEN}}$	—	—	FOSC2	FOSC1	FOSC0	111- -111
300002h	CONFIG2L	—	—	—	—	BORV1	BORV0	BODEN	PWRTEN	---- 1111
300003h	CONFIG2H	—	—	—	—	WDTPS2	WDTPS1	WDTPS0	WDTEN	---- 1111
300005h	CONFIG3H	—	—	—	—	—	—	—	CCP2MX	---- ---1
300006h	CONFIG4L	—	—	—	—	—	—	LVEN	STVREN	---- --11
3FFFFEh	DEVID1	DEV2	DEV1	DEV0	REV4	REV3	REV2	REV1	REV0	0000 0000
3FFFFFh	DEVID2	DEV10	DEV9	DEV8	DEV7	DEV6	DEV5	DEV4	DEV3	0000 0010

Legend: x = unknown, u = unchanged, - = unimplemented, q = value depends on condition, grayed cells are unimplemented read as 0

Register 18-1: Configuration Register 1 High (CONFIG1H: Byte Address 300001h)

R/P-1	R/P-1	R/P-1	U-0	U-0	R/P-1	R/P-1	R/P-1
Reserved	Reserved	$\overline{\text{OSCSEN}}$	—	—	FOSC2	FOSC1	FOSC0
bit 7							bit 0

bit 7-6 **Reserved:** Read as '1'

bit 5 **$\overline{\text{OSCSEN}}$**: Oscillator System Clock Switch Enable bit

1 = Oscillator system clock switch option is disabled (Main oscillator is source)
0 = Oscillator system clock switch option is enabled
(Oscillator switching is enabled)

bit 4-3 **Reserved:** Read as '0'

bit 2-0 **FOSC2:FOSC0**: Oscillator Selection bits

111 = RC oscillator w/ OSC2 configured as RA6
110 = HS oscillator with PLL enabled/CLock frequency = (4 x Fosc)
101 = EC oscillator w/ OSC2 configured as RA6
100 = EC oscillator w/ OSC2 configured as divide by 4 clock output
011 = RC oscillator
010 = HS oscillator
001 = XT oscillator
000 = LP oscillator

Legend:		
R = Readable bit	P = Programmable bit	U = Unimplemented bit, read as '0'
- n = Value when device is unprogrammed		u = Unchanged from programmed state

Register 18-2: Configuration Register 1 Low (CONFIG1L: Byte Address 300000h)

R/P-1	R/P-1	R/P-1	R/P-1	R/P-1	R/P-1	R/P-1	R/P-1
CP	CP	CP	CP	CP	CP	CP	CP
bit 7							bit 0

CP: Code Protection bits (apply when in Code Protected Microcontroller Mode)

1 = Program memory code protection off
0 = All of program memory code protected

Legend:		
R = Readable bit	P = Programmable bit	U = Unimplemented bit, read as '0'
- n = Value when device is unprogrammed		u = Unchanged from programmed state

Register 18-3: Configuration Register 2 High (CONFIG2H: Byte Address 300003h)

U-0	U-0	U-0	U-0	R/P-1	R/P-1	R/P-1	R/P-1
—	—	—	—	WDTPS2	WDTPS1	WDTPS0	WDTEN
bit 7							bit 0

bit 7-4 **Reserved:** Read as ’0’

bit 3-1 **WDTPS2:WDTPS0:** Watchdog Timer Postscale Select bits

000 = 1:128
001 = 1:64
010 = 1:32
011 = 1:16
100 = 1:8
101 = 1:4
110 = 1:2
111 = 1:1

bit 0 **WDTEN:** Watchdog Timer Enable bit

1 = WDT enabled
0 = WDT disabled (control is placed on the SWDTEN bit)

Legend:		
R = Readable bit	P = Programmable bit	U = Unimplemented bit, read as ‘0’
- n = Value when device is unprogrammed		u = Unchanged from programmed state

Register 18-4: Configuration Register 2 Low (CONFIG2L: Byte Address 300002h)

U-0	U-0	U-0	U-0	R/P-1	R/P-1	R/P-1	R/P-1
—	—	—	—	BORV1	BORV0	BOREN	$\overline{\text{PWRTEN}}$
bit 7							bit 0

bit 7-4 **Reserved:** Read as ’0’

bit 3-2 **BORV1:BORV0:** Brown-out Reset Voltage bits

11 = V_{BOR} set to 2.5V
10 = V_{BOR} set to 2.7V
01 = V_{BOR} set to 4.2V
00 = V_{BOR} set to 4.5V

bit 1 **BOREN:** Brown-out Reset Enable bit (1)

1 = Brown-out Reset enabled
0 = Brown-out Reset disabled

Note: Enabling Brown-out Reset automatically enables the Power-up Timer (PWRT), regardless of the value of bit $\overline{\text{PWRTEN}}$. Ensure the Power-up Timer is enabled anytime Brown-out Reset is enabled.

bit 0 **$\overline{\text{PWRTEN}}$:** Power-up Timer Enable bit (1)

1 = PWRT disabled
0 = PWRT enabled

Note: Enabling Brown-out Reset automatically enables the Power-up Timer (PWRT), regardless of the value of bit $\overline{\text{PWRTE}}$. Ensure the Power-up Timer is enabled anytime Brown-out Reset is enabled.

Legend:		
R = Readable bit	P = Programmable bit	U = Unimplemented bit, read as ‘0’
- n = Value when device is unprogrammed		u = Unchanged from programmed state

Register 18-5: Configuration Register 3 High (CONFIG3H: Byte Address 300005h)

U-0	U-0	U-0	U-0	U-0	U-0	U-0	R/P-1
—	—	—	—	—	—	—	CCP2MX
bit 7							bit 0

bit 7-1 **Reserved:** Read as ’0’

bit 0 **CCP2MX:** CCP2 Mux bit

1 = CCP2 input/output is multiplexed with RC1
0 = CCP2 input/output is multiplexed with RB3

Legend:		
R = Readable bit	P = Programmable bit	U = Unimplemented bit, read as ‘0’
- n = Value when device is unprogrammed		u = Unchanged from programmed state

Register 18-6: Configuration Register 4 Low (CONFIG3H: Byte Address 300006h)

U-0	U-0	U-0	U-0	U-0	U-0	R/P-1	R/P-1
—	—	—	—	—	—	Reserved	STVREN
bit 7							bit 0

bit 7-2 **Reserved:** Read as ’0’

bit 1 **Reserved:** Maintain this bit set.

bit 0 **STVREN:** Stack Full/Underflow Reset Enable bit

1 = Stack Full/Underflow will cause reset
0 = Stack Full/Underflow will not cause reset

Legend:		
R = Readable bit	P = Programmable bit	U = Unimplemented bit, read as ‘0’
- n = Value when device is unprogrammed		u = Unchanged from programmed state

18.2 Watchdog Timer (WDT)

The Watchdog Timer is a free running on-chip RC oscillator, which does not require any external components. This RC oscillator is separate from the RC oscillator of the OSC1/CLKI pin. That means that the WDT will run, even if the clock on the OSC1/CLKI and OSC2/CLKO/RA6 pins of the device has been stopped, for example, by execution of a SLEEP instruction.

During normal operation, a WDT time-out generates a device RESET (Watchdog Timer Reset). If the device is in SLEEP mode, a WDT time-out causes the device to wake-up and continue with normal operation (Watchdog Timer Wake-up). The $\overline{TO}$ bit in the RCON register will be cleared upon a WDT time-out.

The Watchdog Timer is enabled/disabled by a device configuration bit. If the WDT is enabled, software execution may not disable this function. When the WDTEN configuration bit is cleared, the SWDTEN bit enables/disables the operation of the WDT.

The WDT time-out period values may be found in the Electrical Specifications section under parameter #31. Values for the WDT postscaler may be assigned using the configuration bits.

Note:	The CLRWDT and SLEEP instructions clear the WDT and the postscaler if assigned to the WDT, and prevent it from timing out and generating a device RESET condition.

Note:	When a CLRWDT instruction is executed and the prescaler is assigned to the WDT, the prescaler count will be cleared, but the prescaler assignment is not changed.

18.2.1 CONTROL REGISTER

Register 18-7 shows the WDTCON register. This is a readable and writable register, which contains a control bit that allows software to override the WDT enable configuration bit, only when the configuration bit has disabled the WDT.

Register 18-7 WDTCON Register

U-0	U-0	U-0	U-0	U-0	U-0	U-0	R/W-0
—	—	—	—	—	—	—	SWDTEN
bit 7							bit 0

bit 7:1 **Unimplemented**: Read as ’0’

bit 0 **SWDTEN:** Software Controlled Watchdog Timer Enable Bit
1 = Watchdog Timer is on
0 = Watchdog Timer is turned off if the WDTEN configuration bit in the configuration register = ’0’

Legend:	
R = Readable bit	W = Writable bit
U = Unimplemented bit, read as ‘0’	- n = Value at POR reset

18.2.2 WDT POSTSCALER

The WDT has a postscaler that can extend the WDT reset period. The postscaler is selected at the time of the device programming, by the value written to the CONFIG2H configuration register.

FIGURE 18-1: WATCHDOG TIMER BLOCK DIAGRAM

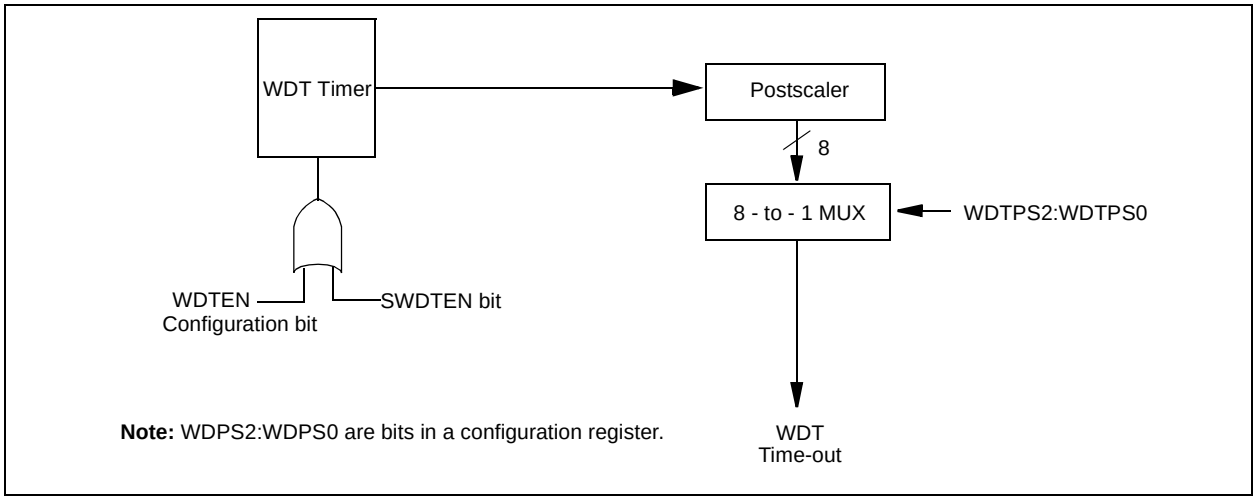

Note: WDPS2:WDPS0 are bits in a configuration register.

FIGURE 18-2: SUMMARY OF WATCHDOG TIMER REGISTERS

Name	Bit 7	Bit 6	Bit 5	Bit 4	Bit 3	Bit 2	Bit 1	Bit 0
CONFIG2H	—	—	—	—	WDTPS2	WDTPS2	WDTPS0	WDTEN
RCON	IPEN	LWRT	—	$\overline{RI}$	$\overline{TO}$	$\overline{PD}$	$\overline{POR}$	$\overline{BOR}$
WDTCON	—	—	—	—	—	—	—	SWDTEN

Legend: Shaded cells are not used by the Watchdog Timer.

18.3 Power-down Mode (SLEEP)

Power-down mode is entered by executing a SLEEP instruction.

If enabled, the Watchdog Timer will be cleared, but keeps running, the $\overline{PD}$ bit (RCON<3>) is cleared, the $\overline{TO}$ (RCON<4>) bit is set, and the oscillator driver is turned off. The I/O ports maintain the status they had before the SLEEP instruction was executed (driving high, low or hi-impedance).

For lowest current consumption in this mode, place all I/O pins at either V_{DD} or V_{SS}, ensure no external circuitry is drawing current from the I/O pin, power-down the A/D and disable external clocks. Pull all I/O pins that are hi-impedance inputs, high or low externally, to avoid switching currents caused by floating inputs. The T0CKI input should also be at V_{DD} or V_{SS} for lowest current consumption. The contribution from on-chip pull-ups on PORTB should be considered.

The $\overline{MCLR}$ pin must be at a logic high level (V_{IHMC}).

18.3.1 WAKE-UP FROM SLEEP

The device can wake up from SLEEP through one of the following events:

1. External reset input on $\overline{MCLR}$ pin.
2. Watchdog Timer Wake-up (if WDT was enabled).
3. Interrupt from INT pin, RB port change or a Peripheral Interrupt.

The following peripheral interrupts can wake the device from SLEEP:

1. PSP read or write.
2. TMR1 interrupt. Timer1 must be operating as an asynchronous counter.
3. TMR3 interrupt. Timer3 must be operating as an asynchronous counter.
4. CCP capture mode interrupt.
5. Special event trigger (Timer1 in asynchronous mode using an external clock).
6. MSSP (Start/Stop) bit detect interrupt.
7. MSSP transmit or receive in slave mode (SPI/ I^2C).
8. USART RX or TX (synchronous slave mode).
9. A/D conversion (when A/D clock source is RC).

Other peripherals cannot generate interrupts, since during SLEEP, no on-chip clocks are present.

External $\overline{MCLR}$ Reset will cause a device reset. All other events are considered a continuation of program execution and will cause a "wake-up". The $\overline{TO}$ and $\overline{PD}$ bits in the RCON register can be used to determine the cause of the device reset. The $\overline{PD}$ bit, which is set on power-up, is cleared when SLEEP is invoked. The $\overline{TO}$ bit is cleared, if a WDT time-out occurred (and caused wake-up).

When the SLEEP instruction is being executed, the next instruction (PC + 2) is pre-fetched. For the device to wake-up through an interrupt event, the corresponding interrupt enable bit must be set (enabled). Wake-up is regardless of the state of the GIE bit. If the GIE bit is clear (disabled), the device continues execution at the instruction after the SLEEP instruction. If the GIE bit is set (enabled), the device executes the instruction after the SLEEP instruction and then branches to the interrupt address. In cases where the execution of the instruction following SLEEP is not desirable, the user should have a NOP after the SLEEP instruction.

18.3.2 WAKE-UP USING INTERRUPTS

When global interrupts are disabled (GIE cleared) and any interrupt source has both its interrupt enable bit and interrupt flag bit set, one of the following will occur:

- If an interrupt condition (interrupt flag bit and interrupt enable bits are set) occurs **before** the execution of a SLEEP instruction, the SLEEP instruction will complete as a NOP. Therefore, the WDT and WDT postscaler will not be cleared, the $\overline{TO}$ bit will not be set and $\overline{PD}$ bits will not be cleared.
- If the interrupt condition occurs **during or after** the execution of a SLEEP instruction, the device will immediately wake up from sleep. The SLEEP instruction will be completely executed before the wake-up. Therefore, the WDT and WDT postscaler will be cleared, the $\overline{TO}$ bit will be set and the $\overline{PD}$ bit will be cleared.

Even if the flag bits were checked before executing a SLEEP instruction, it may be possible for flag bits to become set before the SLEEP instruction completes. To determine whether a SLEEP instruction executed, test the $\overline{PD}$ bit. If the $\overline{PD}$ bit is set, the SLEEP instruction was executed as a NOP.

To ensure that the WDT is cleared, a CLRWDT instruction should be executed before a SLEEP instruction.

FIGURE 18-3: WAKE-UP FROM SLEEP THROUGH INTERRUPT(1,2)

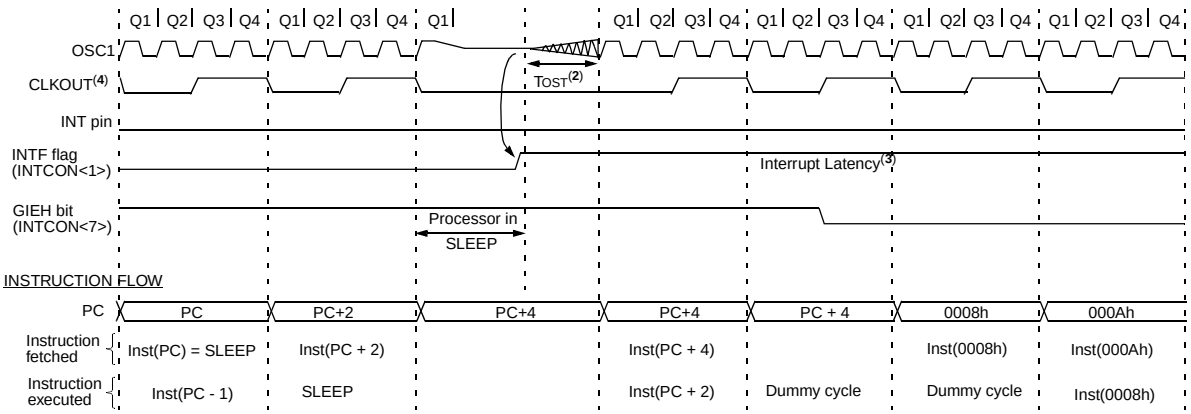

Note 1: XT, HS or LP oscillator mode assumed.
2: GIE = '1' assumed. In this case, after wake- up, the processor jumps to the interrupt routine. If GIE = '0', execution will continue in-line.
3: TOST = 1024TOSC (drawing not to scale) This delay will not occur for RC and EC osc modes.
4: CLKOUT is not available in these osc modes, but shown here for timing reference.

18.4 Program Verification/Code Protection

If the code protection bit(s) have not been programmed, the on-chip program memory can be read out for verification purposes.

Note:	Microchip Technology does not recommend code protecting windowed devices.

18.5 ID Locations

Five memory locations (200000h - 200004h) are designated as ID locations, where the user can store checksum or other code-identification numbers. These locations are accessible during normal execution through the TBLRD instruction or during program/verify. The ID locations can be read when the device is code protected.

18.6 In-Circuit Serial Programming

PIC18CXXX microcontrollers can be serially programmed while in the end application circuit. This is simply done with two lines for clock and data, and three other lines for power, ground and the programming voltage. This allows customers to manufacture boards with unprogrammed devices, and then program the microcontroller just before shipping the product. This also allows the most recent firmware or a custom firmware to be programmed.

NOTES:

19.0 INSTRUCTION SET SUMMARY

The PIC18CXXX instruction set adds many enhancements to the previous PICmicro instruction sets, while maintaining an easy migration from these PICmicro instruction sets.

Most instructions are a single program memory word (16-bits), but there are three instructions that require two program memory locations.

Each single word instruction is a 16-bit word divided into an OPCODE, which specifies the instruction type and one or more operands, which further specify the operation of the instruction.

The instruction set is highly orthogonal and is grouped into four basic categories:

- **Byte-oriented** operations
- **Bit-oriented** operations
- **Literal** operations
- **Control** operations

The PIC18CXXX instruction set summary in Table 19-2 lists **byte-oriented**, **bit-oriented**, **literal** and **control** operations. Table 19-1 shows the opcode field descriptions.

Most **byte-oriented** instructions have three operands:

1. The file register (specified by the value of 'f')
2. The destination of the result (specified by the value of 'd')
3. The accessed memory (specified by the value of 'a')

'f' represents a file register designator and 'd' represents a destination designator. The file register designator specifies which file register is to be used by the instruction.

The destination designator specifies where the result of the operation is to be placed. If 'd' is zero, the result is placed in the WREG register. If 'd' is one, the result is placed in the file register specified in the instruction.

All **bit-oriented** instructions have three operands:

1. The file register (specified by the value of 'f')
2. The bit in the file register (specified by the value of 'b')
3. The accessed memory (specified by the value of 'a')

'b' represents a bit field designator which selects the number of the bit affected by the operation, while 'f' represents the number of the file in which the bit is located.

The **literal** instructions may use some of the following operands:

- A literal value to be loaded into a file register (specified by the value of 'k')
- The desired FSR register to load the literal value into (specified by the value of 'f')
- No operand required (specified by the value of '—')

The **control** instructions may use some of the following operands:

- A program memory address (specified by the value of 'n')
- The mode of the Call or Return instructions (specified by the value of 's')
- The mode of the Table Read and Table Write instructions (specified by the value of 'm')
- No operand required (specified by the value of '—')

All instructions are a single word, except for three double word instructions. These three instructions were made double word instructions so that all the required information is available in these 32-bits. In the second word, the 4-MSb's are 1's. If this second word is executed as an instruction (by itself), it will execute as a `NOP`.

All single word instructions are executed in a single instruction cycle, unless a conditional test is true or the program counter is changed as a result of the instruction. In these cases, the execution takes two instruction cycles with the additional instruction cycle(s) executed as a `NOP`.

The double word instructions execute in two instruction cycles.

One instruction cycle consists of four oscillator periods. Thus, for an oscillator frequency of 4 MHz, the normal instruction execution time is 1 µs. If a conditional test is true or the program counter is changed as a result of an instruction, the instruction execution time is 2 µs. Two word branch instructions (if true) would take 3 µs.

Figure 19-1 shows the general formats that the instructions can have.

All examples use the following format to represent a hexadecimal number:

```
0xhh
```

where h signifies a hexadecimal digit.

The Instruction Set Summary, shown in Table 19-2, lists the instructions recognized by the Microchip assembler (MPASM).

Section 19.1 provides a description of each instruction.

TABLE 19-1: OPCODE FIELD DESCRIPTIONS

Field	Description
a	RAM access bit a = 0: RAM location in Access RAM (BSR register is ignored) a = 1: RAM bank is specified by BSR register
bbb	Bit address within an 8-bit file register (0 to 7)
BSR	Bank Select Register. Used to select the current RAM bank.
d	Destination select bit; d = 0: store result in WREG, d = 1: store result in file register f.
dest	Destination either the WREG register or the specified register file location
f	8-bit Register file address (0x00 to 0xFF)
fs	12-bit Register file address (0x000 to 0xFFF). This is the source address.
fd	12-bit Register file address (0x000 to 0xFFF). This is the destination address.
k	Literal field, constant data or label (may be either an 8-bit, 12-bit or a 20-bit value)
label	Label name
mm * *+ *- +*	The mode of the TBLPTR register for the Table Read and Table Write instructions Only used with Table Read and Table Write instructions: No Change to register (such as TBLPTR with Table reads and writes) Post-Increment register (such as TBLPTR with Table reads and writes) Post-Decrement register (such as TBLPTR with Table reads and writes) Pre-Increment register (such as TBLPTR with Table reads and writes)
n	The relative address (2's complement number) for relative branch instructions, or the direct address for Call/Branch and Return instructions
PRODH	Product of Multiply high byte
PRODL	Product of Multiply low byte
s	Fast Call / Return mode select bit. s = 0: do not update into/from shadow registers s = 1: certain registers loaded into/from shadow registers (Fast mode)
u	Unused or Unchanged
WREG	Working register (accumulator)
x	Don't care (0 or 1) The assembler will generate code with x = 0. It is the recommended form of use for compatibility with all Microchip software tools.
TBLPTR	21-bit Table Pointer (points to a Program Memory location)
TABLAT	8-bit Table Latch
TOS	Top of Stack
PC	Program Counter
PCL	Program Counter Low Byte
PCH	Program Counter High Byte
PCLATH	Program Counter High Byte Latch
PCLATU	Program Counter Upper Byte Latch
GIE	Global Interrupt Enable bit
WDT	Watchdog Timer
$\overline{TO}$	Time-out bit
$\overline{PD}$	Power-down bit
C, DC, Z, OV, N	ALU status bits Carry, Digit Carry, Zero, Overflow, Negative
[ ]	Optional
( )	Contents
→	Assigned to
< >	Register bit field
∈	In the set of
italics	User defined term (font is courier)

FIGURE 19-1: GENERAL FORMAT FOR INSTRUCTIONS

Byte-oriented file register operations

Example Instruction

15 – 10	9	8	7 – 0
OPCODE	d	a	f (FILE #)

ADDWF MYREG, W, B

d = 0 for result destination to be WREG register
d = 1 for result destination to be file register (f)
a = 0 to force Access Bank
a = 1 for BSR to select bank
f = 8-bit file register address

Byte to Byte move operations (2-word)

15 – 12	11 – 0
OPCODE	f (Source FILE #)
1111	f (Destination FILE #)

MOVFF MYREG1, MYREG2

f = 12-bit file register address

Bit-oriented file register operations

15 – 12	11 – 9	8	7 – 0
OPCODE	b (BIT #)	a	f (FILE #)

BSF MYREG, bit, B

b = 3-bit position of bit in file register (f)
a = 0 to force Access Bank
a = 1 for BSR to select bank
f = 8-bit file register address

Literal operations

15 – 8	7 – 0
OPCODE	k (literal)

MOVLW 0x7F

k = 8-bit immediate value

Control operations

CALL, GOTO and Branch operations

15 – 8	7 – 0
OPCODE	n<7:0> (literal)

GOTO Label

15 – 12	11 – 0
1111	n<19:8> (literal)

n = 20-bit immediate value

15 – 8	7	7 – 0
OPCODE	S	n<7:0> (literal)

CALL MYFUNC

15 – 12	11 – 0
	n<19:8> (literal)

S = Fast bit

15 – 11	10 – 0
OPCODE	n<10:0> (literal)

BRA MYFUNC

15 – 8	7 – 0
OPCODE	n<7:0> (literal)

BC MYFUNC

TABLE 19-2: PIC18CXXX INSTRUCTION SET

Mnemonic, Operands		Description	Cycles	16-Bit Instruction Word MSb			LSb	Status Affected	Notes
BYTE-ORIENTED FILE REGISTER OPERATIONS									
ADDWF	f, d, a	Add WREG and f	1	0010	01da	ffff	ffff	C, DC, Z, OV, N	1, 2
ADDWFC	f, d, a	Add WREG and Carry bit to f	1	0010	00da	ffff	ffff	C, DC, Z, OV, N	1, 2
ANDWF	f, d, a	AND WREG with f	1	0001	01da	ffff	ffff	Z, N	1,2
CLRF	f, a	Clear f	1	0110	101a	ffff	ffff	Z	2
COMF	f, d, a	Complement f	1	0001	11da	ffff	ffff	Z, N	1, 2
CPFSEQ	f, a	Compare f with WREG, skip =	1 (2 or 3)	0110	001a	ffff	ffff	None	4
CPFSGT	f, a	Compare f with WREG, skip >	1 (2 or 3)	0110	010a	ffff	ffff	None	4
CPFSLT	f, a	Compare f with WREG, skip <	1 (2 or 3)	0110	000a	ffff	ffff	None	1, 2
DECF	f, d, a	Decrement f	1	0000	01da	ffff	ffff	C, DC, Z, OV, N	1, 2, 3, 4
DECFSZ	f, d, a	Decrement f, Skip if 0	1 (2 or 3)	0010	11da	ffff	ffff	None	1, 2, 3, 4
DCFSNZ	f, d, a	Decrement f, Skip if Not 0	1 (2 or 3)	0100	11da	ffff	ffff	None	1, 2
INCF	f, d, a	Increment f	1	0010	10da	ffff	ffff	C, DC, Z, OV, N	1, 2, 3, 4
INCFSZ	f, d, a	Increment f, Skip if 0	1 (2 or 3)	0011	11da	ffff	ffff	None	4
INFSNZ	f, d, a	Increment f, Skip if Not 0	1 (2 or 3)	0100	10da	ffff	ffff	None	1, 2
IORWF	f, d, a	Inclusive OR WREG with f	1	0001	00da	ffff	ffff	Z, N	1, 2
MOVF	f, d, a	Move f	1	0101	00da	ffff	ffff	Z, N	1
MOVFF	f_s, f_d	Move f_s (source) to 1st word	2	1100	ffff	ffff	ffff	None	
		f_d (destination)2nd word		1111	ffff	ffff	ffff		
MOVWF	f, a	Move WREG to f	1	0110	111a	ffff	ffff	None	
MULWF	f, a	Multiply WREG with f	1	0000	001a	ffff	ffff	None	
NEGF	f, a	Negate f	1	0110	110a	ffff	ffff	C, DC, Z, OV, N	1, 2
RLCF	f, d, a	Rotate Left f through Carry	1	0011	01da	ffff	ffff	C, Z, N	
RLNCF	f, d, a	Rotate Left f (No Carry)	1	0100	01da	ffff	ffff	Z, N	1, 2
RRCF	f, d, a	Rotate Right f through Carry	1	0011	00da	ffff	ffff	C, Z, N	
RRNCF	f, d, a	Rotate Right f (No Carry)	1	0100	00da	ffff	ffff	Z, N	
SETF	f, a	Set f	1	0110	100a	ffff	ffff	None	
SUBFWB	f, d, a	Subtract f from WREG with borrow	1	0101	01da	ffff	ffff	C, DC, Z, OV, N	1, 2
SUBWF	f, d, a	Subtract WREG from f	1	0101	11da	ffff	ffff	C, DC, Z, OV, N	
SUBWFB	f, d, a	Subtract WREG from f with borrow	1	0101	10da	ffff	ffff	C, DC, Z, OV, N	1, 2
SWAPF	f, d, a	Swap nibbles in f	1	0011	10da	ffff	ffff	None	4
TSTFSZ	f, a	Test f, skip if 0	1 (2 or 3)	0110	011a	ffff	ffff	None	1, 2
XORWF	f, d, a	Exclusive OR WREG with f	1	0001	10da	ffff	ffff	Z, N	
BIT-ORIENTED FILE REGISTER OPERATIONS									
BCF	f, b, a	Bit Clear f	1	1001	bbba	ffff	ffff	None	1, 2
BSF	f, b, a	Bit Set f	1	1000	bbba	ffff	ffff	None	1, 2
BTFSC	f, b, a	Bit Test f, Skip if Clear	1 (2 or 3)	1011	bbba	ffff	ffff	None	3, 4
BTFSS	f, b, a	Bit Test f, Skip if Set	1 (2 or 3)	1010	bbba	ffff	ffff	None	3, 4
BTG	f, d, a	Bit Toggle f	1	0111	bbba	ffff	ffff	None	1, 2

Note 1: When a PORT register is modified as a function of itself (e.g., `MOVF PORTB, 1, 0`), the value used will be that value present on the pins themselves. For example, if the data latch is '1' for a pin configured as input and is driven low by an external device, the data will be written back with a '0'.

2: If this instruction is executed on the TMR0 register (and, where applicable, d = 1), the prescaler will be cleared if assigned.

3: If Program Counter (PC) is modified or a conditional test is true, the instruction requires two cycles. The second cycle is executed as a `NOP`.

4: Some instructions are 2 word instructions. The second word of these instruction will be executed as a `NOP`, unless the first word of the instruction retrieves the information embedded in these 16-bits. This ensures that all program memory locations have a valid instruction.

5: If the table write starts the write cycle to internal memory, the write will continue until terminated.

TABLE 19-2: PIC18CXXX INSTRUCTION SET (Cont.'d)

Mnemonic, Operands		Description	Cycles	16-Bit Instruction Word MSb			LSb	Status Affected	Notes
CONTROL OPERATIONS									
BC	n	Branch if Carry	1 (2)	1110	0010	nnnn	nnnn	None	
BN	n	Branch if Negative	1 (2)	1110	0110	nnnn	nnnn	None	
BNC	n	Branch if Not Carry	1 (2)	1110	0011	nnnn	nnnn	None	
BNN	n	Branch if Not Negative	1 (2)	1110	0111	nnnn	nnnn	None	
BNOV	n	Branch if Not Overflow	1 (2)	1110	0101	nnnn	nnnn	None	
BNZ	n	Branch if Not Zero	2	1110	0001	nnnn	nnnn	None	
BOV	n	Branch if Overflow	1 (2)	1110	0100	nnnn	nnnn	None	
BRA	n	Branch Unconditionally	1 (2)	1101	0nnn	nnnn	nnnn	None	
BZ	n	Branch if Zero	1 (2)	1110	0000	nnnn	nnnn	None	
CALL	n, s	Call subroutine1st word	2	1110	110s	kkkk	kkkk	None	
		2nd word		1111	kkkk	kkkk	kkkk		
CLRWDT	—	Clear Watchdog Timer	1	0000	0000	0000	0100	$\overline{TO}$, $\overline{PD}$	
DAW	—	Decimal Adjust WREG	1	0000	0000	0000	0111	C	
GOTO	n	Go to address1st word	2	1110	1111	kkkk	kkkk	None	
		2nd word		1111	kkkk	kkkk	kkkk		
NOP	—	No Operation	1	0000	0000	0000	0000	None	
NOP	—	No Operation (Note 4)	1	1111	xxxx	xxxx	xxxx	None	
POP	—	Pop top of return stack (TOS)	1	0000	0000	0000	0110	None	
PUSH	—	Push top of return stack (TOS)	1	0000	0000	0000	0101	None	
RCALL	n	Relative Call	2	1101	1nnn	nnnn	nnnn	None	
RESET		Software device RESET	1	0000	0000	1111	1111	All	
RETFIE	s	Return from interrupt enable	2	0000	0000	0001	000s	GIE/GIEH, PEIE/GIEL	
RETLW	k	Return with literal in WREG	2	0000	1100	kkkk	kkkk	None	
RETURN	s	Return from Subroutine	2	0000	0000	0001	001s	None	
SLEEP	—	Go into standby mode	1	0000	0000	0000	0011	$\overline{TO}$, $\overline{PD}$	

Note 1: When a PORT register is modified as a function of itself (e.g., `MOVF PORTB, 1, 0`), the value used will be that value present on the pins themselves. For example, if the data latch is '1' for a pin configured as input and is driven low by an external device, the data will be written back with a '0'.

2: If this instruction is executed on the TMR0 register (and, where applicable, d = 1), the prescaler will be cleared if assigned.

3: If Program Counter (PC) is modified or a conditional test is true, the instruction requires two cycles. The second cycle is executed as a `NOP`.

4: Some instructions are 2 word instructions. The second word of these instruction will be executed as a `NOP`, unless the first word of the instruction retrieves the information embedded in these 16-bits. This ensures that all program memory locations have a valid instruction.

5: If the table write starts the write cycle to internal memory, the write will continue until terminated.

TABLE 19-2: PIC18CXXX INSTRUCTION SET (Cont.'d)

Mnemonic, Operands		Description	Cycles	16-Bit Instruction Word MSb			LSb	Status Affected	Notes
LITERAL OPERATIONS									
ADDLW	k	Add literal and WREG	1	0000	1111	kkkk	kkkk	C, DC, Z, OV, N	
ANDLW	k	AND literal with WREG	1	0000	1011	kkkk	kkkk	Z, N	
IORLW	k	Inclusive OR literal with WREG	1	0000	1001	kkkk	kkkk	Z, N	
LFSR	f, k	Move literal (12-bit)1st word	2	1110	1110	00ff	kkkk	None	
		to FSRx2nd word		1111	0000	kkkk	kkkk		
MOVLB	k	Move literal to BSR<3:0>	1	0000	0001	0000	kkkk	None	
MOVLW	k	Move literal to WREG	1	0000	1110	kkkk	kkkk	None	
MULLW	k	Multiply literal with WREG	1	0000	1101	kkkk	kkkk	None	
RETLW	k	Return with literal in WREG	2	0000	1100	kkkk	kkkk	None	
SUBLW	k	Subtract WREG from literal	1	0000	1000	kkkk	kkkk	C, DC, Z, OV, N	
XORLW	k	Exclusive OR literal with WREG	1	0000	1010	kkkk	kkkk	Z, N	
DATA MEMORY ↔ PROGRAM MEMORY OPERATIONS									
TBLRD*		Table Read	2	0000	0000	0000	1000	None	
TBLRD*+		Table Read with post-increment		0000	0000	0000	1001	None	
TBLRD*-		Table Read with post-decrement		0000	0000	0000	1010	None	
TBLRD+*		Table Read with pre-increment		0000	0000	0000	1011	None	
TBLWT*		Table Write	2 **(5)**	0000	0000	0000	1100	None	
TBLWT*+		Table Write with post-increment		0000	0000	0000	1101	None	
TBLWT*-		Table Write with post-decrement		0000	0000	0000	1110	None	
TBLWT+*		Table Write with pre-increment		0000	0000	0000	1111	None	

Note 1: When a PORT register is modified as a function of itself (e.g., `MOVF PORTB, 1, 0`), the value used will be that value present on the pins themselves. For example, if the data latch is '1' for a pin configured as input and is driven low by an external device, the data will be written back with a '0'.

2: If this instruction is executed on the TMR0 register (and, where applicable, d = 1), the prescaler will be cleared if assigned.

3: If Program Counter (PC) is modified or a conditional test is true, the instruction requires two cycles. The second cycle is executed as a `NOP`.

4: Some instructions are 2 word instructions. The second word of these instruction will be executed as a `NOP`, unless the first word of the instruction retrieves the information embedded in these 16-bits. This ensures that all program memory locations have a valid instruction.

5: If the table write starts the write cycle to internal memory, the write will continue until terminated.

19.1 Instruction Set

ADDLW — ADD literal to WREG

Syntax: [*label*] ADDLW k

Operands: $0 \le k \le 255$

Operation: (WREG) + k → WREG

Status Affected: N,OV, C, DC, Z

Encoding:

0000	1111	kkkk	kkkk

Description: The contents of WREG are added to the 8-bit literal 'k' and the result is placed in WREG.

Words: 1

Cycles: 1

Q Cycle Activity:

Q1	Q2	Q3	Q4
Decode	Read literal 'k'	Process Data	Write to WREG

Example: `ADDLW 0x15`

Before Instruction

```
WREG = 0x10
```

After Instruction

```
WREG = 0x25
```

ADDWF — ADD WREG to f

Syntax: [*label*] ADDWF f,d,a

Operands: $0 \le f \le 255$
$d \in [0,1]$
$a \in [0,1]$

Operation: (WREG) + (f) → dest

Status Affected: N,OV, C, DC, Z

Encoding:

0010	01da	ffff	ffff

Description: Add WREG to register 'f'. If 'd' is 0, the result is stored in WREG. If 'd' is 1, the result is stored back in register 'f' (default). If 'a' is 0, the Access Bank will be selected. If 'a' is 1, the BSR will not be overridden (default).

Words: 1

Cycles: 1

Q Cycle Activity:

Q1	Q2	Q3	Q4
Decode	Read register 'f'	Process Data	Write to destination

Example: `ADDWF REG, 0, 0`

Before Instruction

```
WREG = 0x17
REG  = 0xC2
```

After Instruction

```
WREG = 0xD9
REG  = 0xC2
```

ADDWFC — ADD WREG and Carry bit to f

Syntax: [*label*] ADDWFC f,d,a

Operands: $0 \le f \le 255$
$d \in [0,1]$
$a \in [0,1]$

Operation: (WREG) + (f) + (C) → dest

Status Affected: N,OV, C, DC, Z

Encoding:

0010	00da	ffff	ffff

Description: Add WREG, the Carry Flag and data memory location 'f'. If 'd' is 0, the result is placed in WREG. If 'd' is 1, the result is placed in data memory location 'f'. If 'a' is 0, the Access Bank will be selected. If 'a' is 1, the BSR will not be overridden.

Words: 1

Cycles: 1

Q Cycle Activity:

Q1	Q2	Q3	Q4
Decode	Read register 'f'	Process Data	Write to destination

Example: `ADDWFC REG, 0, 1`

Before Instruction
```
Carry bit= 1
REG    =   0x02
WREG   =   0x4D
```
After Instruction
```
Carry bit= 0
REG    =   0x02
WREG   =   0x50
```

ANDLW — AND literal with WREG

Syntax: [*label*] ANDLW k

Operands: $0 \le k \le 255$

Operation: (WREG) .AND. k → WREG

Status Affected: N,Z

Encoding:

0000	1011	kkkk	kkkk

Description: The contents of WREG are AND'ed with the 8-bit literal 'k'. The result is placed in WREG.

Words: 1

Cycles: 1

Q Cycle Activity:

Q1	Q2	Q3	Q4
Decode	Read literal 'k'	Process Data	Write to WREG

Example: `ANDLW 0x5F`

Before Instruction
```
WREG   =   0xA3
```
After Instruction
```
WREG   =   0x03
```

ANDWF — AND WREG with f

Syntax:	[*label*] ANDWF f,d,a
Operands:	$0 \le f \le 255$ $d \in [0,1]$ $a \in [0,1]$
Operation:	(WREG) .AND. (f) → dest
Status Affected:	N,Z
Encoding:	0001 | 01da | ffff | ffff
Description:	The contents of WREG are AND'ed with register 'f'. If 'd' is 0, the result is stored in WREG. If 'd' is 1, the result is stored back in register 'f' (default). If 'a' is 0, the Access Bank will be selected. If 'a' is 1, the BSR will not be overridden (default).
Words:	1
Cycles:	1

Q Cycle Activity:

Q1	Q2	Q3	Q4
Decode	Read register 'f'	Process Data	Write to destination

Example: `ANDWF REG, 0, 0`

Before Instruction

```
WREG  =  0x17
REG   =  0xC2
```

After Instruction

```
WREG  =  0x02
REG   =  0xC2
```

BC — Branch if Carry

Syntax:	[*label*] BC n
Operands:	$-128 \le n \le 127$
Operation:	if carry bit is '1' (PC) + 2 + 2n → PC
Status Affected:	None
Encoding:	1110 | 0010 | nnnn | nnnn
Description:	If the Carry bit is '1', then the program will branch. The 2's complement number '2n' is added to the PC. Since the PC will have incremented to fetch the next instruction, the new address will be PC+2+2n. This instruction is then a two-cycle instruction.
Words:	1
Cycles:	1(2)

Q Cycle Activity:

If Jump:

Q1	Q2	Q3	Q4
Decode	Read literal 'n'	Process Data	Write to PC
No operation	No operation	No operation	No operation

If No Jump:

Q1	Q2	Q3	Q4
Decode	Read literal 'n'	Process Data	No operation

Example: `HERE BC 5`

Before Instruction

```
PC          =  address (HERE)
```

After Instruction

```
If Carry    =  1;
    PC      =  address (HERE+12)
If Carry    =  0;
    PC      =  address (HERE+2)
```

BCF	Bit Clear f
Syntax:	[*label*] BCF f,b,a
Operands:	$0 \le f \le 255$ $0 \le b \le 7$ $a \in [0,1]$
Operation:	$0 \rightarrow f<b>$
Status Affected:	None
Encoding:	1001 | bbba | ffff | ffff
Description:	Bit 'b' in register 'f' is cleared. If 'a' is 0, the Access Bank will be selected, overriding the BSR value. If 'a' = 1, then the bank will be selected as per the BSR value (default).
Words:	1
Cycles:	1

Q Cycle Activity:

Q1	Q2	Q3	Q4
Decode	Read register 'f'	Process Data	Write register 'f'

Example: `BCF FLAG_REG, 7, 0`

Before Instruction
```
FLAG_REG = 0xC7
```
After Instruction
```
FLAG_REG = 0x47
```

BN	Branch if Negative
Syntax:	[*label*] BN n
Operands:	$-128 \le n \le 127$
Operation:	if negative bit is '1' (PC) + 2 + 2n $\rightarrow$ PC
Status Affected:	None
Encoding:	1110 | 0110 | nnnn | nnnn
Description:	If the Negative bit is '1', then the program will branch. The 2's complement number '2n' is added to the PC. Since the PC will have incremented to fetch the next instruction, the new address will be PC+2+2n. This instruction is then a two-cycle instruction.
Words:	1
Cycles:	1(2)

Q Cycle Activity:
If Jump:

Q1	Q2	Q3	Q4
Decode	Read literal 'n'	Process Data	Write to PC
No operation	No operation	No operation	No operation

If No Jump:

Q1	Q2	Q3	Q4
Decode	Read literal 'n'	Process Data	No operation

Example: `HERE BN Jump`

Before Instruction
```
PC          =   address (HERE)
```
After Instruction
```
If Negative=   1;
    PC      =   address (Jump)
If Negative=   0;
    PC      =   address (HERE+2)
```

BNC	Branch if Not Carry
Syntax:	[*label*] BNC n
Operands:	-128 ≤ n ≤ 127
Operation:	if carry bit is '0' (PC) + 2 + 2n → PC
Status Affected:	None
Encoding:	1110 | 0011 | nnnn | nnnn
Description:	If the Carry bit is '0', then the program will branch. The 2's complement number '2n' is added to the PC. Since the PC will have incremented to fetch the next instruction, the new address will be PC+2+2n. This instruction is then a two-cycle instruction.
Words:	1
Cycles:	1(2)

Q Cycle Activity:

If Jump:

Q1	Q2	Q3	Q4
Decode	Read literal 'n'	Process Data	Write to PC
No operation	No operation	No operation	No operation

If No Jump:

Q1	Q2	Q3	Q4
Decode	Read literal 'n'	Process Data	No operation

Example: `HERE BNC Jump`

Before Instruction

```
PC          =   address (HERE)
```

After Instruction

```
If Carry    =   0;
    PC      =   address (Jump)
If Carry    =   1;
    PC      =   address (HERE+2)
```

BNN	Branch if Not Negative
Syntax:	[*label*] BNN n
Operands:	-128 ≤ n ≤ 127
Operation:	if negative bit is '0' (PC) + 2 + 2n → PC
Status Affected:	None
Encoding:	1110 | 0111 | nnnn | nnnn
Description:	If the Negative bit is '0', then the program will branch. The 2's complement number '2n' is added to the PC. Since the PC will have incremented to fetch the next instruction, the new address will be PC+2+2n. This instruction is then a two-cycle instruction.
Words:	1
Cycles:	1(2)

Q Cycle Activity:

If Jump:

Q1	Q2	Q3	Q4
Decode	Read literal 'n'	Process Data	Write to PC
No operation	No operation	No operation	No operation

If No Jump:

Q1	Q2	Q3	Q4
Decode	Read literal 'n'	Process Data	No operation

Example: `HERE BNN Jump`

Before Instruction

```
PC          =   address (HERE)
```

After Instruction

```
If Negative=    0;
    PC      =   address (Jump)
If Negative=    1;
    PC      =   address (HERE+2)
```

BNOV	Branch if Not Overflow
Syntax:	[*label*] BNOV n
Operands:	-128 ≤ n ≤ 127
Operation:	if overflow bit is '0' (PC) + 2 + 2n → PC
Status Affected:	None
Encoding:	1110 | 0101 | nnnn | nnnn
Description:	If the Overflow bit is '0', then the program will branch. The 2's complement number '2n' is added to the PC. Since the PC will have incremented to fetch the next instruction, the new address will be PC+2+2n. This instruction is then a two-cycle instruction.
Words:	1
Cycles:	1(2)

Q Cycle Activity:
If Jump:

Q1	Q2	Q3	Q4
Decode	Read literal 'n'	Process Data	Write to PC
No operation	No operation	No operation	No operation

If No Jump:

Q1	Q2	Q3	Q4
Decode	Read literal 'n'	Process Data	No operation

Example: `HERE BNOV Jump`

Before Instruction
```
PC          =   address (HERE)
```
After Instruction
```
If Overflow=   0;
    PC     =   address (Jump)
If Overflow=   1;
    PC     =   address (HERE+2)
```

BNZ	Branch if Not Zero
Syntax:	[*label*] BNZ n
Operands:	-128 ≤ n ≤ 127
Operation:	if zero bit is '0' (PC) + 2 + 2n → PC
Status Affected:	None
Encoding:	1110 | 0001 | nnnn | nnnn
Description:	If the Zero bit is '0', then the program will branch. The 2's complement number '2n' is added to the PC. Since the PC will have incremented to fetch the next instruction, the new address will be PC+2+2n. This instruction is then a two-cycle instruction.
Words:	1
Cycles:	1(2)

Q Cycle Activity:
If Jump:

Q1	Q2	Q3	Q4
Decode	Read literal 'n'	Process Data	Write to PC
No operation	No operation	No operation	No operation

If No Jump:

Q1	Q2	Q3	Q4
Decode	Read literal 'n'	Process Data	No operation

Example: `HERE BNZ Jump`

Before Instruction
```
PC          =   address (HERE)
```
After Instruction
```
If Zero    =   0;
    PC     =   address (Jump)
If Zero    =   1;
    PC     =   address (HERE+2)
```

BRA	Unconditional Branch
Syntax:	[*label*] BRA n
Operands:	-1024 ≤ n ≤ 1023
Operation:	(PC) + 2 + 2n → PC
Status Affected:	None
Encoding:	1101 | 0nnn | nnnn | nnnn
Description:	Add the 2's complement number '2n' to the PC. Since the PC will have incremented to fetch the next instruction, the new address will be PC+2+2n. This instruction is a two-cycle instruction.
Words:	1
Cycles:	2

Q Cycle Activity:

Q1	Q2	Q3	Q4
Decode	Read literal 'n'	Process Data	Write to PC
No operation	No operation	No operation	No operation

Example: `HERE BRA Jump`

Before Instruction
`PC = address (HERE)`
After Instruction
`PC = address (Jump)`

BSF	Bit Set f
Syntax:	[*label*] BSF f,b,a
Operands:	0 ≤ f ≤ 255 0 ≤ b ≤ 7 a ∈ [0,1]
Operation:	1 → f<b>
Status Affected:	None
Encoding:	1000 | bbba | ffff | ffff
Description:	Bit 'b' in register 'f' is set. If 'a' is 0 Access Bank will be selected, over-riding the BSR value. If 'a' = 1, then the bank will be selected as per the BSR value.
Words:	1
Cycles:	1

Q Cycle Activity:

Q1	Q2	Q3	Q4
Decode	Read register 'f'	Process Data	Write register 'f'

Example: `BSF FLAG_REG, 7, 1`

Before Instruction
`FLAG_REG= 0x0A`
After Instruction
`FLAG_REG= 0x8A`

BTFSC — Bit Test File, Skip if Clear

Syntax: [*label*] BTFSC f,b,a

Operands: $0 \le f \le 255$
$0 \le b \le 7$
$a \in [0,1]$

Operation: skip if (f<b>) = 0

Status Affected: None

Encoding:

1011	bbba	ffff	ffff

Description: If bit 'b' in register 'f' is 0, then the next instruction is skipped.

If bit 'b' is 0, then the next instruction fetched during the current instruction execution is discarded, and a NOP is executed instead, making this a two-cycle instruction. If 'a' is 0, the Access Bank will be selected, overriding the BSR value. If 'a' = 1, then the bank will be selected as per the BSR value (default).

Words: 1

Cycles: 1(2)
Note: 3 cycles if skip and followed by a 2-word instruction

Q Cycle Activity:

Q1	Q2	Q3	Q4
Decode	Read register 'f'	Process Data	No operation

If skip:

Q1	Q2	Q3	Q4
No operation	No operation	No operation	No operation

If skip and followed by 2-word instruction:

Q1	Q2	Q3	Q4
No operation	No operation	No operation	No operation
No operation	No operation	No operation	No operation

Example:

```
HERE    BTFSC    FLAG, 1, 0
FALSE    :
TRUE     :
```

Before Instruction
```
PC          =   address (HERE)
```
After Instruction
```
If FLAG<1> =   0;
    PC     =   address (TRUE)
If FLAG<1> =   1;
    PC     =   address (FALSE)
```

BTFSS — Bit Test File, Skip if Set

Syntax: [*label*] BTFSS f,b,a

Operands: $0 \le f \le 255$
$0 \le b < 7$
$a \in [0,1]$

Operation: skip if (f<b>) = 1

Status Affected: None

Encoding:

1010	bbba	ffff	ffff

Description: If bit 'b' in register 'f' is 1 then the next instruction is skipped.

If bit 'b' is 1, then the next instruction fetched during the current instruction execution, is discarded and an NOP is executed instead, making this a two-cycle instruction. If 'a' is 0, the Access Bank will be selected, overriding the BSR value. If 'a' = 1, then the bank will be selected as per the BSR value (default).

Words: 1

Cycles: 1(2)
Note: 3 cycles if skip and followed by a 2-word instruction

Q Cycle Activity:

Q1	Q2	Q3	Q4
Decode	Read register 'f'	Process Data	No operation

If skip:

Q1	Q2	Q3	Q4
No operation	No operation	No operation	No operation

If skip and followed by 2-word instruction:

Q1	Q2	Q3	Q4
No operation	No operation	No operation	No operation
No operation	No operation	No operation	No operation

Example:

```
HERE    BTFSS    FLAG, 1, 0
FALSE    :
TRUE     :
```

Before Instruction
```
PC          =   address (HERE)
```
After Instruction
```
If FLAG<1> =   0;
    PC     =   address (FALSE)
If FLAG<1> =   1;
    PC     =   address (TRUE)
```

BTG	Bit Toggle f
Syntax:	[*label*] BTG f,b,a
Operands:	$0 \le f \le 255$ $0 \le b < 7$ $a \in [0,1]$
Operation:	$(\overline{f<b>}) \rightarrow f<b>$
Status Affected:	None
Encoding:	0111 | bbba | ffff | ffff
Description:	Bit 'b' in data memory location 'f' is inverted. If 'a' is 0, the Access Bank will be selected, overriding the BSR value. If 'a' = 1, then the bank will be selected as per the BSR value (default).
Words:	1
Cycles:	1

Q Cycle Activity:

Q1	Q2	Q3	Q4
Decode	Read register 'f'	Process Data	Write register 'f'

Example: `BTG PORTC, 4, 0`

Before Instruction:
```
PORTC  =  0111 0101 [0x75]
```
After Instruction:
```
PORTC  =  0110 0101 [0x65]
```

BOV	Branch if Overflow
Syntax:	[*label*] BOV n
Operands:	$-128 \le n \le 127$
Operation:	if overflow bit is '1' $(PC) + 2 + 2n \rightarrow PC$
Status Affected:	None
Encoding:	1110 | 0100 | nnnn | nnnn
Description:	If the Overflow bit is '1', then the program will branch. The 2's complement number '2n' is added to the PC. Since the PC will have incremented to fetch the next instruction, the new address will be PC+2+2n. This instruction is then a two-cycle instruction.
Words:	1
Cycles:	1(2)

Q Cycle Activity:

If Jump:

Q1	Q2	Q3	Q4
Decode	Read literal 'n'	Process Data	Write to PC
No operation	No operation	No operation	No operation

If No Jump:

Q1	Q2	Q3	Q4
Decode	Read literal 'n'	Process Data	No operation

Example: `HERE BOV Jump`

Before Instruction
```
PC          =   address (HERE)
```
After Instruction
```
If Overflow=   1;
    PC      =   address (Jump)
If Overflow=   0;
    PC      =   address (HERE+2)
```

BZ	Branch if Zero
Syntax:	[*label*] BZ n
Operands:	-128 ≤ n ≤ 127
Operation:	if Zero bit is '1' (PC) + 2 + 2n → PC
Status Affected:	None
Encoding:	1110 | 0000 | nnnn | nnnn
Description:	If the Zero bit is '1', then the program will branch. The 2's complement number '2n' is added to the PC. Since the PC will have incremented to fetch the next instruction, the new address will be PC+2+2n. This instruction is then a two-cycle instruction.
Words:	1
Cycles:	1(2)

Q Cycle Activity:
If Jump:

Q1	Q2	Q3	Q4
Decode	Read literal 'n'	Process Data	Write to PC
No operation	No operation	No operation	No operation

If No Jump:

Q1	Q2	Q3	Q4
Decode	Read literal 'n'	Process Data	No operation

Example: `HERE BZ Jump`

Before Instruction
```
PC          =   address (HERE)
```
After Instruction
```
If Zero     =   1;
    PC      =   address (Jump)
If Zero     =   0;
    PC      =   address (HERE+2)
```

CALL	Subroutine Call
Syntax:	[*label*] CALL k,s
Operands:	0 ≤ k ≤ 1048575 s ∈ [0,1]
Operation:	(PC) + 4 → TOS, k → PC<20:1>, if s = 1 (WREG) → WS, (STATUS) → STATUSS, (BSR) → BSRS
Status Affected:	None
Encoding: 1st word (k<7:0>) 2nd word(k<19:8>)	1110 | 110s | $k_7$kkk | kkkk$_0$ 1111 | k_{19}kkk | kkkk | kkkk$_8$
Description:	Subroutine call of entire 2M byte memory range. First, return address (PC+ 4) is pushed onto the return stack. If 's' = 1, the W, STATUS and BSR registers are also pushed into their respective shadow registers, WS, STATUSS and BSRS. If 's' = 0, no update occurs (default). Then the 20-bit value 'k' is loaded into PC<20:1>. CALL is a two-cycle instruction.
Words:	2
Cycles:	2

Q Cycle Activity:

Q1	Q2	Q3	Q4
Decode	Read literal 'k'<7:0>,	Push PC to stack	Read literal 'k'<19:8>, Write to PC
No operation	No operation	No operation	No operation

Example: `HERE CALL THERE,1`

Before Instruction
```
PC  =   Address(HERE)
```
After Instruction
```
PC  =   Address(THERE)
TOS =   Address (HERE + 4)
WS  =   WREG
BSRS=   BSR
STATUSS = STATUS
```

CLRF	Clear f
Syntax:	[*label*] CLRF f,a
Operands:	$0 \le f \le 255$ $a \in [0,1]$
Operation:	000h → f 1 → Z
Status Affected:	Z
Encoding:	0110 101a ffff ffff
Description:	Clears the contents of the specified register. If 'a' is 0, the Access Bank will be selected, overriding the BSR value. If 'a' = 1, then the bank will be selected as per the BSR value (default).
Words:	1
Cycles:	1

Q Cycle Activity:

Q1	Q2	Q3	Q4
Decode	Read register 'f'	Process Data	Write register 'f'

Example: `CLRF FLAG_REG,1`

Before Instruction
```
FLAG_REG    =   0x5A
```
After Instruction
```
FLAG_REG    =   0x00
```

CLRWDT	Clear Watchdog Timer
Syntax:	[*label*] CLRWDT
Operands:	None
Operation:	000h → WDT, 000h → WDT postscaler, 1 → $\overline{TO}$, 1 → $\overline{PD}$
Status Affected:	$\overline{TO}$, $\overline{PD}$
Encoding:	0000 0000 0000 0100
Description:	CLRWDT instruction resets the Watchdog Timer. It also resets the postscaler of the WDT. Status bits $\overline{TO}$ and $\overline{PD}$ are set.
Words:	1
Cycles:	1

Q Cycle Activity:

Q1	Q2	Q3	Q4
Decode	No operation	Process Data	No operation

Example: `CLRWDT`

Before Instruction
```
WDT counter     =   ?
```
After Instruction
```
WDT counter     =   0x00
WDT Postscaler  =   0
TO              =   1
PD              =   1
```

COMF	Complement f
Syntax:	[*label*] COMF f,d,a
Operands:	$0 \le f \le 255$ $d \in [0,1]$ $a \in [0,1]$
Operation:	$(\overline{f}) \rightarrow$ dest
Status Affected:	N,Z
Encoding:	0001 | 11da | ffff | ffff
Description:	The contents of register 'f' are complemented. If 'd' is 0 the result is stored in WREG. If 'd' is 1 the result is stored back in register 'f' (default). If 'a' is 0, the Access Bank will be selected, overriding the BSR value. If 'a' = 1, then the bank will be selected as per the BSR value (default).
Words:	1
Cycles:	1

Q Cycle Activity:

Q1	Q2	Q3	Q4
Decode	Read register 'f'	Process Data	Write to destination

Example: `COMF REG, 0, 0`

Before Instruction
```
REG    =   0x13
```
After Instruction
```
REG    =   0x13
WREG   =   0xEC
```

CPFSEQ	Compare f with WREG, skip if f = WREG
Syntax:	[*label*] CPFSEQ f,a
Operands:	$0 \le f \le 255$ $a \in [0,1]$
Operation:	(f) – (WREG), skip if (f) = (WREG) (unsigned comparison)
Status Affected:	None
Encoding:	0110 | 001a | ffff | ffff
Description:	Compares the contents of data memory location 'f' to the contents of WREG by performing an unsigned subtraction. If 'f' = WREG, then the fetched instruction is discarded and an NOP is executed instead making this a two-cycle instruction. If 'a' is 0, the Access Bank will be selected, overriding the BSR value. If 'a' = 1, then the bank will be selected as per the BSR value (default).
Words:	1
Cycles:	1(2) Note: 3 cycles if skip and followed by a 2-word instruction

Q Cycle Activity:

Q1	Q2	Q3	Q4
Decode	Read register 'f'	Process Data	No operation

If skip:

Q1	Q2	Q3	Q4
No operation	No operation	No operation	No operation

If skip and followed by 2-word instruction:

Q1	Q2	Q3	Q4
No operation	No operation	No operation	No operation
No operation	No operation	No operation	No operation

Example:
```
HERE     CPFSEQ REG, 0
NEQUAL   :
EQUAL    :
```

Before Instruction
```
PC Address =   HERE
WREG       =   ?
REG        =   ?
```
After Instruction
```
If REG     =   WREG;
   PC      =   Address (EQUAL)
If REG     ≠   WREG;
   PC      =   Address (NEQUAL)
```

CPFSGT	Compare f with WREG, skip if f > WREG
Syntax:	[*label*] CPFSGT f,a
Operands:	$0 \le f \le 255$ $a \in [0,1]$
Operation:	(f) – (WREG), skip if (f) > (WREG) (unsigned comparison)
Status Affected:	None
Encoding:	0110 010a ffff ffff
Description:	Compares the contents of data memory location 'f' to the contents of the WREG by performing an unsigned subtraction. If the contents of 'f' are greater than the contents of **,** then the fetched instruction is discarded and a NOP is executed instead making this a two-cycle instruction. If 'a' is 0, the Access Bank will be selected, over-riding the BSR value. If 'a' = 1, then the bank will be selected as per the BSR value (default).
Words:	1
Cycles:	1(2) Note: 3 cycles if skip and followed by a 2-word instruction

Q Cycle Activity:

Q1	Q2	Q3	Q4
Decode	Read register 'f'	Process Data	No operation

If skip:

Q1	Q2	Q3	Q4
No operation	No operation	No operation	No operation

If skip and followed by 2-word instruction:

Q1	Q2	Q3	Q4
No operation	No operation	No operation	No operation
No operation	No operation	No operation	No operation

Example:

```
HERE      CPFSGT REG, 0
NGREATER  :
GREATER   :
```

Before Instruction

```
PC      =   Address (HERE)
WREG    =   ?
```

After Instruction

```
If REG  >   WREG;
   PC   =   Address (GREATER)
If REG  ≤   WREG;
   PC   =   Address (NGREATER)
```

CPFSLT	Compare f with WREG, skip if f < WREG
Syntax:	[*label*] CPFSLT f,a
Operands:	$0 \le f \le 255$ $a \in [0,1]$
Operation:	(f) – (WREG), skip if (f) < (WREG) (unsigned comparison)
Status Affected:	None
Encoding:	0110 000a ffff ffff
Description:	Compares the contents of data memory location 'f' to the contents of WREG by performing an unsigned subtraction. If the contents of 'f' are less than the contents of WREG, then the fetched instruction is discarded and a NOP is executed instead making this a two-cycle instruction. If 'a' is 0, the Access Bank will be selected. If 'a' is 1 the BSR will not be overridden (default).
Words:	1
Cycles:	1(2) Note: 3 cycles if skip and followed by a 2-word instruction

Q Cycle Activity:

Q1	Q2	Q3	Q4
Decode	Read register 'f'	Process Data	No operation

If skip:

Q1	Q2	Q3	Q4
No operation	No operation	No operation	No operation

If skip and followed by 2-word instruction:

Q1	Q2	Q3	Q4
No operation	No operation	No operation	No operation
No operation	No operation	No operation	No operation

Example:

```
HERE    CPFSLT REG, 1
NLESS   :
LESS    :
```

Before Instruction

```
PC      =   Address (HERE)
W       =   ?
```

After Instruction

```
If REG  <   WREG;
PC      =   Address (LESS)
If REG  ≥   WREG;
PC      =   Address (NLESS)
```

DAW — Decimal Adjust WREG Register

Syntax: [*label*] DAW

Operands: None

Operation: If [WREG<3:0> >9] or [DC = 1] then
(WREG<3:0>) + 6 → WREG<3:0>;
else
(WREG<3:0>) → WREG<3:0>;

If [WREG<7:4> >9] or [C = 1] then
(WREG<7:4>) + 6 → WREG<7:4>;
else
(WREG<7:4>) → WREG<7:4>;

Status Affected: C

Encoding:

0000	0000	0000	0111

Description: DAW adjusts the eight bit value in WREG resulting from the earlier addition of two variables (each in packed BCD format) and produces a correct packed BCD result.

Words: 1

Cycles: 1

Q Cycle Activity:

Q1	Q2	Q3	Q4
Decode	Read register WREG	Process Data	Write WREG

Example1: `DAW`

Before Instruction

```
WREG    =   0xA5
C       =   0
DC      =   0
```

After Instruction

```
WREG    =   0x05
C       =   1
DC      =   0
```

Example 2:

Before Instruction

```
WREG    =   0xCE
C       =   0
DC      =   0
```

After Instruction

```
WREG    =   0x34
C       =   1
DC      =   0
```

DECF — Decrement f

Syntax: [*label*] DECF f,d,a

Operands: $0 \le f \le 255$
$d \in [0,1]$
$a \in [0,1]$

Operation: (f) – 1 → dest

Status Affected: C,DC,N,OV,Z

Encoding:

0000	01da	ffff	ffff

Description: Decrement register 'f'. If 'd' is 0, the result is stored in WREG. If 'd' is 1, the result is stored back in register 'f' (default). If 'a' is 0, the Access Bank will be selected, overriding the BSR value. If 'a' = 1, then the bank will be selected as per the BSR value (default).

Words: 1

Cycles: 1

Q Cycle Activity:

Q1	Q2	Q3	Q4
Decode	Read register 'f'	Process Data	Write to destination

Example: `DECF CNT, 1, 0`

Before Instruction

```
CNT     =   0x01
Z       =   0
```

After Instruction

```
CNT     =   0x00
Z       =   1
```

DECFSZ — Decrement f, skip if 0

Syntax:	[*label*] DECFSZ f,d,a
Operands:	$0 \le f \le 255$ $d \in [0,1]$ $a \in [0,1]$
Operation:	(f) – 1 → dest, skip if result = 0
Status Affected:	None
Encoding:	`0010` `11da` `ffff` `ffff`
Description:	The contents of register 'f' are decremented. If 'd' is 0, the result is placed in WREG. If 'd' is 1, the result is placed back in register 'f' (default). If the result is 0, the next instruction, which is already fetched, is discarded, and a `NOP` is executed instead making it a two-cycle instruction. If 'a' is 0, the Access Bank will be selected, overriding the BSR value. If 'a' = 1, then the bank will be selected as per the BSR value (default).
Words:	1
Cycles:	1(2) Note: 3 cycles if skip and followed by a 2-word instruction

Q Cycle Activity:

Q1	Q2	Q3	Q4
Decode	Read register 'f'	Process Data	Write to destination

If skip:

Q1	Q2	Q3	Q4
No operation	No operation	No operation	No operation

If skip and followed by 2-word instruction:

Q1	Q2	Q3	Q4
No operation	No operation	No operation	No operation
No operation	No operation	No operation	No operation

Example:

```
HERE      DECFSZ   CNT, 1, 1
          GOTO     LOOP
CONTINUE
```

Before Instruction

```
PC      =   Address (HERE)
```

After Instruction

```
CNT     =   CNT - 1
If CNT  =   0;
    PC  =   Address (CONTINUE)
If CNT  ≠   0;
    PC  =   Address (HERE+2)
```

DCFSNZ — Decrement f, skip if not 0

Syntax:	[*label*] DCFSNZ f,d,a
Operands:	$0 \le f \le 255$ $d \in [0,1]$ $a \in [0,1]$
Operation:	(f) – 1 → dest, skip if result ≠ 0
Status Affected:	None
Encoding:	`0100` `11da` `ffff` `ffff`
Description:	The contents of register 'f' are decremented. If 'd' is 0, the result is placed in WREG. If 'd' is 1, the result is placed back in register 'f' (default). If the result is not 0, the next instruction, which is already fetched, is discarded, and a `NOP` is executed instead making it a two-cycle instruction. If 'a' is 0, the Access Bank will be selected, overriding the BSR value. If 'a' = 1, then the bank will be selected as per the BSR value (default).
Words:	1
Cycles:	1(2) Note: 3 cycles if skip and followed by a 2-word instruction

Q Cycle Activity:

Q1	Q2	Q3	Q4
Decode	Read register 'f'	Process Data	Write to destination

If skip:

Q1	Q2	Q3	Q4
No operation	No operation	No operation	No operation

If skip and followed by 2-word instruction:

Q1	Q2	Q3	Q4
No operation	No operation	No operation	No operation
No operation	No operation	No operation	No operation

Example:

```
HERE    DCFSNZ  TEMP, 1, 0
ZERO    :
NZERO   :
```

Before Instruction

```
TEMP            =   ?
```

After Instruction

```
TEMP            =   TEMP - 1,
If TEMP         =   0;
    PC          =   Address (ZERO)
If TEMP         ≠   0;
    PC          =   Address (NZERO)
```

GOTO — Unconditional Branch

Syntax: [*label*] GOTO k

Operands: $0 \le k \le 1048575$

Operation: k → PC<20:1>

Status Affected: None

Encoding:

1st word (k<7:0>)	1110	1111	$k_7$kkk	kkkk$_0$
2nd word(k<19:8>)	1111	k_{19}kkk	kkkk	kkkk$_8$

Description: GOTO allows an unconditional branch anywhere within entire 2M byte memory range. The 20-bit value 'k' is loaded into PC<20:1>. GOTO is always a two-cycle instruction.

Words: 2

Cycles: 2

Q Cycle Activity:

Q1	Q2	Q3	Q4
Decode	Read literal 'k'<7:0>,	No operation	Read literal 'k'<19:8>, Write to PC
No operation	No operation	No operation	No operation

Example: `GOTO THERE`

After Instruction

```
PC  =  Address (THERE)
```

INCF — Increment f

Syntax: [*label*] INCF f,d,a

Operands: $0 \le f \le 255$
$d \in [0,1]$
$a \in [0,1]$

Operation: (f) + 1 → dest

Status Affected: C,DC,N,OV,Z

Encoding:

0010	10da	ffff	ffff

Description: The contents of register 'f' are incremented. If 'd' is 0, the result is placed in WREG. If 'd' is 1, the result is placed back in register 'f' (default). If 'a' is 0, the Access Bank will be selected, overriding the BSR value. If 'a' = 1, then the bank will be selected as per the BSR value (default).

Words: 1

Cycles: 1

Q Cycle Activity:

Q1	Q2	Q3	Q4
Decode	Read register 'f'	Process Data	Write to destination

Example: `INCF CNT, 1, 0`

Before Instruction

```
CNT  =  0xFF
Z    =  0
C    =  ?
DC   =  ?
```

After Instruction

```
CNT  =  0x00
Z    =  1
C    =  1
DC   =  1
```

INCFSZ	Increment f, skip if 0
Syntax:	[*label*] INCFSZ f,d,a
Operands:	$0 \le f \le 255$ $d \in [0,1]$ $a \in [0,1]$
Operation:	(f) + 1 → dest, skip if result = 0
Status Affected:	None
Encoding:	`0011` `11da` `ffff` `ffff`
Description:	The contents of register 'f' are incremented. If 'd' is 0, the result is placed in WREG. If 'd' is 1, the result is placed back in register 'f'. (default) If the result is 0, the next instruction, which is already fetched, is discarded, and a `NOP` is executed instead making it a two-cycle instruction. If 'a' is 0, the Access Bank will be selected, overriding the BSR value. If 'a' = 1, then the bank will be selected as per the BSR value (default).
Words:	1
Cycles:	1(2) Note: 3 cycles if skip and followed by a 2-word instruction

Q Cycle Activity:

Q1	Q2	Q3	Q4
Decode	Read register 'f'	Process Data	Write to destination

If skip:

Q1	Q2	Q3	Q4
No operation	No operation	No operation	No operation

If skip and followed by 2-word instruction:

Q1	Q2	Q3	Q4
No operation	No operation	No operation	No operation
No operation	No operation	No operation	No operation

Example:

```
HERE    INCFSZ   CNT, 1, 0
NZERO   :
ZERO    :
```

Before Instruction

```
PC      =   Address (HERE)
```

After Instruction

```
CNT     =   CNT + 1
If CNT  =   0;
    PC  =   Address(ZERO)
If CNT  ≠   0;
    PC  =   Address(NZERO)
```

INFSNZ	Increment f, skip if not 0
Syntax:	[*label*] INFSNZ f,d,a
Operands:	$0 \le f \le 255$ $d \in [0,1]$ $a \in [0,1]$
Operation:	(f) + 1 → dest, skip if result ≠ 0
Status Affected:	None
Encoding:	`0100` `10da` `ffff` `ffff`
Description:	The contents of register 'f' are incremented. If 'd' is 0, the result is placed in WREG. If 'd' is 1, the result is placed back in register 'f' (default). If the result is not 0, the next instruction, which is already fetched, is discarded, and a `NOP` is executed instead making it a two-cycle instruction. If 'a' is 0, the Access Bank will be selected, overriding the BSR value. If 'a' = 1, then the bank will be selected as per the BSR value (default).
Words:	1
Cycles:	1(2) Note: 3 cycles if skip and followed by a 2-word instruction

Q Cycle Activity:

Q1	Q2	Q3	Q4
Decode	Read register 'f'	Process Data	Write to destination

If skip:

Q1	Q2	Q3	Q4
No operation	No operation	No operation	No operation

If skip and followed by 2-word instruction:

Q1	Q2	Q3	Q4
No operation	No operation	No operation	No operation
No operation	No operation	No operation	No operation

Example:

```
HERE    INFSNZ  REG, 1, 0
ZERO
NZERO
```

Before Instruction

```
PC      =   Address (HERE)
```

After Instruction

```
REG     =   REG + 1
If REG  ≠   0;
    PC  =   Address (NZERO)
If REG  =   0;
    PC  =   Address (ZERO)
```

IORLW — Inclusive OR literal with WREG

Syntax: [*label*] IORLW k

Operands: $0 \le k \le 255$

Operation: (WREG) .OR. k → WREG

Status Affected: N,Z

Encoding:

0000	1001	kkkk	kkkk

Description: The contents of WREG are OR'ed with the eight bit literal 'k'. The result is placed in WREG.

Words: 1

Cycles: 1

Q Cycle Activity:

Q1	Q2	Q3	Q4
Decode	Read literal 'k'	Process Data	Write to WREG

Example: `IORLW 0x35`

Before Instruction

```
WREG = 0x9A
```

After Instruction

```
WREG = 0xBF
```

IORWF — Inclusive OR WREG with f

Syntax: [*label*] IORWF f,d,a

Operands: $0 \le f \le 255$
$d \in [0,1]$
$a \in [0,1]$

Operation: (WREG) .OR. (f) → dest

Status Affected: N,Z

Encoding:

0001	00da	ffff	ffff

Description: Inclusive OR WREG with register 'f'. If 'd' is 0, the result is placed in WREG. If 'd' is 1, the result is placed back in register 'f' (default). If 'a' is 0, the Access Bank will be selected, overriding the BSR value. If 'a' = 1, then the bank will be selected as per the BSR value (default).

Words: 1

Cycles: 1

Q Cycle Activity:

Q1	Q2	Q3	Q4
Decode	Read register 'f'	Process Data	Write to destination

Example: `IORWF RESULT, 0, 1`

Before Instruction

```
RESULT = 0x13
WREG   = 0x91
```

After Instruction

```
RESULT = 0x13
WREG   = 0x93
```

LFSR	**Load FSR**
Syntax:	[*label*] LFSR f,k
Operands:	$0 \le f \le 2$ $0 \le k \le 4095$
Operation:	$k \rightarrow FSRf$
Status Affected:	None
Encoding:	1110 1111 | 1110 0000 | 00ff $k_7$kkk | k_{11}kkk kkkk
Description:	The 12-bit literal 'k' is loaded into the file select register pointed to by 'f'
Words:	2
Cycles:	2

Q Cycle Activity:

Q1	Q2	Q3	Q4
Decode	Read literal 'k' MSB	Process Data	Write literal 'k' MSB to FSRfH
Decode	Read literal 'k' LSB	Process Data	Write literal 'k' to FSRfL

Example: `LFSR 2, 0x3AB`

After Instruction

```
FSR2H    =   0x03
FSR2L    =   0xAB
```

MOVF	**Move f**
Syntax:	[*label*] MOVF f,d,a
Operands:	$0 \le f \le 255$ $d \in [0,1]$ $a \in [0,1]$
Operation:	$f \rightarrow dest$
Status Affected:	N,Z
Encoding:	0101 | 00da | ffff | ffff
Description:	The contents of register 'f' is moved to a destination dependent upon the status of 'd'. If 'd' is 0, the result is placed in WREG. If 'd' is 1, the result is placed back in register 'f' (default). Location 'f' can be anywhere in the 256 byte bank. If 'a' is 0, the Access Bank will be selected, overriding the BSR value. If 'a' = 1, then the bank will be selected as per the BSR value (default).
Words:	1
Cycles:	1

Q Cycle Activity:

Q1	Q2	Q3	Q4
Decode	Read register 'f'	Process Data	Write WREG

Example: `MOVF REG, 0, 0`

Before Instruction

```
REG      =   0x22
WREG     =   0xFF
```

After Instruction

```
REG      =   0x22
WREG     =   0x22
```

MOVFF — Move f to f

Syntax: [*label*] MOVFF f_s,f_d

Operands: $0 \le f_s \le 4095$
$0 \le f_d \le 4095$

Operation: $(f_s) \rightarrow f_d$

Status Affected: None

Encoding:

1st word (source)	1100	ffff	ffff	$ffff_s$
2nd word (destin.)	1111	ffff	ffff	$ffff_d$

Description: The contents of source register 'f_s' are moved to destination register 'f_d'. Location of source 'f_s' can be anywhere in the 4096 byte data space (000h to FFFh), and location of destination 'f_d' can also be anywhere from 000h to FFFh.

Either source or destination can be WREG (a useful special situation).

MOVFF is particularly useful for transferring a data memory location to a peripheral register (such as the transmit buffer or an I/O port).

The MOVFF instruction cannot use the PCL, TOSU, TOSH or TOSL as the destination register

Words: 2

Cycles: 2 (3)

Q Cycle Activity:

Q1	Q2	Q3	Q4
Decode	Read register 'f' (src)	Process Data	No operation
Decode	No operation No dummy read	No operation	Write register 'f' (dest)

Example: `MOVFF REG1, REG2`

Before Instruction
```
REG1      =   0x33
REG2      =   0x11
```
After Instruction
```
REG1      =   0x33,
REG2      =   0x33
```

MOVLB — Move literal to low nibble in BSR

Syntax: [*label*] MOVLB k

Operands: $0 \le k \le 255$

Operation: $k \rightarrow BSR$

Status Affected: None

Encoding:

0000	0001	kkkk	kkkk

Description: The 8-bit literal 'k' is loaded into the Bank Select Register (BSR).

Words: 1

Cycles: 1

Q Cycle Activity:

Q1	Q2	Q3	Q4
Decode	Read literal 'k'	Process Data	Write literal 'k' to BSR

Example: `MOVLB 5`

Before Instruction
```
BSR register=  0x02
```
After Instruction
```
BSR register=  0x05
```

MOVLW — Move literal to WREG

Syntax: [*label*] MOVLW k

Operands: $0 \le k \le 255$

Operation: k → WREG

Status Affected: None

Encoding:

0000	1110	kkkk	kkkk

Description: The eight bit literal 'k' is loaded into WREG.

Words: 1

Cycles: 1

Q Cycle Activity:

Q1	Q2	Q3	Q4
Decode	Read literal 'k'	Process Data	Write to WREG

Example: `MOVLW 0x5A`

After Instruction

```
WREG = 0x5A
```

MOVWF — Move WREG to f

Syntax: [*label*] MOVWF f,a

Operands: $0 \le f \le 255$
$a \in [0,1]$

Operation: (WREG) → f

Status Affected: None

Encoding:

0110	111a	ffff	ffff

Description: Move data from WREG to register 'f'. Location 'f' can be anywhere in the 256 byte bank. If 'a' is 0, the Access Bank will be selected, overriding the BSR value. If 'a' = 1, then the bank will be selected as per the BSR value (default).

Words: 1

Cycles: 1

Q Cycle Activity:

Q1	Q2	Q3	Q4
Decode	Read register 'f'	Process Data	Write register 'f'

Example: `MOVWF REG, 0`

Before Instruction

```
WREG = 0x4F
REG  = 0xFF
```

After Instruction

```
WREG = 0x4F
REG  = 0x4F
```

MULLW — Multiply Literal with WREG

Syntax: [*label*] MULLW k

Operands: $0 \le k \le 255$

Operation: (WREG) x k → PRODH:PRODL

Status Affected: None

Encoding:

0000	1101	kkkk	kkkk

Description: An unsigned multiplication is carried out between the contents of WREG and the 8-bit literal 'k'. The 16-bit result is placed in PRODH:PRODL register pair. PRODH contains the high byte.

WREG is unchanged.

None of the status flags are affected.

Note that neither overflow nor carry is possible in this operation. A zero result is possible but not detected.

Words: 1

Cycles: 1

Q Cycle Activity:

Q1	Q2	Q3	Q4
Decode	Read literal 'k'	Process Data	Write registers PRODH: PRODL

Example: `MULLW 0xC4`

Before Instruction

```
WREG    =  0xE2
PRODH   =  ?
PRODL   =  ?
```

After Instruction

```
WREG    =  0xE2
PRODH   =  0xAD
PRODL   =  0x08
```

MULWF — Multiply WREG with f

Syntax: [*label*] MULWF f,a

Operands: $0 \le f \le 255$
$a \in [0,1]$

Operation: (WREG) x (f) → PRODH:PRODL

Status Affected: None

Encoding:

0000	001a	ffff	ffff

Description: An unsigned multiplication is carried out between the contents of WREG and the register file location 'f'. The 16-bit result is stored in the PRODH:PRODL register pair. PRODH contains the high byte.

Both WREG and 'f' are unchanged.

None of the status flags are affected.

Note that neither overflow nor carry is possible in this operation. A zero result is possible but not detected. If 'a' is 0, the Access Bank will be selected, overriding the BSR value. If 'a' = 1, then the bank will be selected as per the BSR value (default).

Words: 1

Cycles: 1

Q Cycle Activity:

Q1	Q2	Q3	Q4
Decode	Read register 'f'	Process Data	Write registers PRODH: PRODL

Example: `MULWF REG, 1`

Before Instruction

```
WREG    =  0xC4
REG     =  0xB5
PRODH   =  ?
PRODL   =  ?
```

After Instruction

```
WREG    =  0xC4
REG     =  0xB5
PRODH   =  0x8A
PRODL   =  0x94
```

NEGF	Negate f
Syntax:	[*label*] NEGF f,a
Operands:	$0 \le f \le 255$ $a \in [0,1]$
Operation:	$(\overline{f}) + 1 \rightarrow f$
Status Affected:	N,OV, C, DC, Z
Encoding:	`0110` `110a` `ffff` `ffff`
Description:	Location 'f' is negated using two's complement. The result is placed in the data memory location 'f'. If 'a' is 0, the Access Bank will be selected, overriding the BSR value. If 'a' = 1, then the bank will be selected as per the BSR value.
Words:	1
Cycles:	1

Q Cycle Activity:

Q1	Q2	Q3	Q4
Decode	Read register 'f'	Process Data	Write register 'f'

Example: `NEGF REG, 1`

Before Instruction

```
REG     =   0011 1010 [0x3A]
```

After Instruction

```
REG     =   1100 0110 [0xC6]
```

NOP	No Operation
Syntax:	[*label*] NOP
Operands:	None
Operation:	No operation
Status Affected:	None
Encoding:	`0000 1111` `0000 xxxx` `0000 xxxx` `0000 xxxx`
Description:	No operation.
Words:	1
Cycles:	1

Q Cycle Activity:

Q1	Q2	Q3	Q4
Decode	No operation	No operation	No operation

Example:

```
None.
```

POP	Pop Top of Return Stack
Syntax:	[*label*] POP
Operands:	None
Operation:	(TOS) → bit bucket
Status Affected:	None
Encoding:	0000 0000 0000 0110
Description:	The TOS value is pulled off the return stack and is discarded. The TOS value then becomes the previous value that was pushed onto the return stack. This instruction is provided to enable the user to properly manage the return stack to incorporate a software stack.
Words:	1
Cycles:	1

Q Cycle Activity:

Q1	Q2	Q3	Q4
Decode	No operation	POP TOS value	No operation

Example:

```
POP
GOTO      NEW
```

Before Instruction

```
TOS                 =   0031A2h
Stack (1 level down)=  014332h
```

After Instruction

```
TOS                 =   014332h
PC                  =   NEW
```

PUSH	Push Top of Return Stack
Syntax:	[*label*] PUSH
Operands:	None
Operation:	(PC+2) → TOS
Status Affected:	None
Encoding:	0000 0000 0000 0101
Description:	The PC+2 is pushed onto the top of the return stack. The previous TOS value is pushed down on the stack. This instruction allows to implement a software stack by modifying TOS, and then push it onto the return stack.
Words:	1
Cycles:	1

Q Cycle Activity:

Q1	Q2	Q3	Q4
Decode	PUSH PC+2 onto return stack	No operation	No operation

Example:

```
PUSH
```

Before Instruction

```
TOS                 =   00345Ah
PC                  =   000124h
```

After Instruction

```
PC                  =   000126h
TOS                 =   000126h
Stack (1 level down)=  00345Ah
```

RCALL	Relative Call
Syntax:	[*label*] RCALL n
Operands:	-1024 ≤ n ≤ 1023
Operation:	(PC) + 2 → TOS, (PC) + 2 + 2n → PC
Status Affected:	None
Encoding:	1101 | 1nnn | nnnn | nnnn
Description:	Subroutine call with a jump up to 1K from the current location. First, return address (PC+2) is pushed onto the stack. Then, add the 2's complement number '2n' to the PC. Since the PC will have incremented to fetch the next instruction, the new address will be PC+2+2n. This instruction is a two-cycle instruction.
Words:	1
Cycles:	2

Q Cycle Activity:

Q1	Q2	Q3	Q4
Decode	Read literal 'n' Push PC to stack	Process Data	Write to PC
No operation	No operation	No operation	No operation

Example: `HERE RCALL` Jump

Before Instruction

```
PC  =   Address(HERE)
```

After Instruction

```
PC  =   Address(Jump)
TOS =   Address (HERE+2)
```

RESET	Reset
Syntax:	[*label*] RESET
Operands:	None
Operation:	Reset all registers and flags that are affected by a $\overline{\text{MCLR}}$ reset.
Status Affected:	All
Encoding:	0000 | 0000 | 1111 | 1111
Description:	This instruction provides a way to execute a $\overline{\text{MCLR}}$ reset in software.
Words:	1
Cycles:	1

Q Cycle Activity:

Q1	Q2	Q3	Q4
Decode	Start reset	No operation	No operation

Example: `RESET`

After Instruction

```
Registers= Reset Value
Flags*  =  Reset Value
```

RETFIE	Return from Interrupt
Syntax:	[*label*] RETFIE s
Operands:	s ∈ [0,1]
Operation:	(TOS) → PC, 1 → GIE/GIEH or PEIE/GIEL, if s = 1 (WS) → WREG, (STATUSS) → STATUS, (BSRS) → BSR, PCLATU, PCLATH are unchanged.
Status Affected:	GIE/GIEH,PEIE/GIEL.
Encoding:	0000 | 0000 | 0001 | 000s
Description:	Return from Interrupt. Stack is popped and Top of Stack (TOS) is loaded into the PC. Interrupts are enabled by setting the either the high or low priority global interrupt enable bit. If 's' = 1, the contents of the shadow registers WS, STATUSS and BSRS are loaded into their corresponding registers, WREG, STATUS and BSR. If 's' = 0, no update of these registers occurs (default).
Words:	1
Cycles:	2

Q Cycle Activity:

Q1	Q2	Q3	Q4
Decode	No operation	No operation	pop PC from stack Set GIEH or GIEL
No operation	No operation	No operation	No operation

Example: `RETFIE 1`

After Interrupt

```
PC                  =   TOS
W                   =   WS
BSR                 =   BSRS
STATUS              =   STATUSS
GIE/GIEH, PEIE/GIEL=    1
```

RETLW	Return Literal to WREG
Syntax:	[*label*] RETLW k
Operands:	0 ≤ k ≤ 255
Operation:	k → WREG, (TOS) → PC, PCLATU, PCLATH are unchanged
Status Affected:	None
Encoding:	0000 | 1100 | kkkk | kkkk
Description:	WREG is loaded with the eight bit literal 'k'. The program counter is loaded from the top of the stack (the return address). The high address latch (PCLATH) remains unchanged.
Words:	1
Cycles:	2

Q Cycle Activity:

Q1	Q2	Q3	Q4
Decode	Read literal 'k'	Process Data	pop PC from stack, Write to WREG
No operation	No operation	No operation	No operation

Example:

```
   CALL TABLE ; WREG contains table
              ;  offset value
              ;  WREG now has
             ;  table value
   :
TABLE
   ADDWF PCL   ; WREG = offset
   RETLW k0   ; Begin table
   RETLW k1   ;
   :
   :
   RETLW kn   ; End of table
```

Before Instruction

```
WREG    =   0x07
```

After Instruction

```
WREG    =   value of kn
```

RETURN	Return from Subroutine
Syntax:	[*label*] RETURN s
Operands:	s ∈ [0,1]
Operation:	(TOS) → PC, if s = 1 (WS) → WREG, (STATUSS) → STATUS, (BSRS) → BSR, PCLATU, PCLATH are unchanged
Status Affected:	None
Encoding:	0000 | 0000 | 0001 | 001s
Description:	Return from subroutine. The stack is popped and the top of the stack (TOS) is loaded into the program counter. If 's' = 1, the contents of the shadow registers WS, STATUSS and BSRS are loaded into their corresponding registers, WREG, STATUS and BSR. If 's' = 0, no update of these registers occurs (default).
Words:	1
Cycles:	2

Q Cycle Activity:

Q1	Q2	Q3	Q4
Decode	No operation	Process Data	pop PC from stack
No operation	No operation	No operation	No operation

Example: `RETURN`

After Interrupt

```
PC  = TOS
```

RLCF	Rotate Left f through Carry
Syntax:	[*label*] RLCF f,d,a
Operands:	0 ≤ f ≤ 255 d ∈ [0,1] a ∈ [0,1]
Operation:	(f<n>) → dest<n+1>, (f<7>) → C, (C) → dest<0>
Status Affected:	C,N,Z
Encoding:	0011 | 01da | ffff | ffff
Description:	The contents of register 'f' are rotated one bit to the left through the Carry Flag. If 'd' is 0 the result is placed in WREG. If 'd' is 1 the result is stored back in register 'f' (default). If 'a' is 0, the Access Bank will be selected, overriding the BSR value. If 'a' = 1, then the bank will be selected as per the BSR value (default).
Words:	1
Cycles:	1

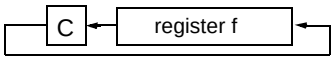

Q Cycle Activity:

Q1	Q2	Q3	Q4
Decode	Read register 'f'	Process Data	Write to destination

Example: `RLCF REG, 0, 0`

Before Instruction

```
REG  =  1110 0110
C    =  0
```

After Instruction

```
REG  =  1110 0110
WREG =  1100 1100
C    =  1
```

RLNCF — Rotate Left f (no carry)

Syntax:	[*label*] RLNCF f,d,a
Operands:	$0 \le f \le 255$ $d \in [0,1]$ $a \in [0,1]$
Operation:	(f<n>) → dest<n+1>, (f<7>) → dest<0>
Status Affected:	N,Z
Encoding:	0100 | 01da | ffff | ffff
Description:	The contents of register 'f' are rotated one bit to the left. If 'd' is 0 the result is placed in WREG. If 'd' is 1, the result is stored back in register 'f' (default). If 'a' is 0, the Access Bank will be selected, overriding the BSR value. If 'a' is 1, then the bank will be selected as per the BSR value (default).

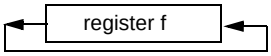

Words:	1
Cycles:	1

Q Cycle Activity:

Q1	Q2	Q3	Q4
Decode	Read register 'f'	Process Data	Write to destination

Example: `RLNCF REG, 1, 0`

Before Instruction
```
REG     =   1010 1011
```
After Instruction
```
REG     =   0101 0111
```

RRCF — Rotate Right f through Carry

Syntax:	[*label*] RRCF f,d,a
Operands:	$0 \le f \le 255$ $d \in [0,1]$ $a \in [0,1]$
Operation:	(f<n>) → dest<n-1>, (f<0>) → C, (C) → dest<7>
Status Affected:	C,N,Z
Encoding:	0011 | 00da | ffff | ffff
Description:	The contents of register 'f' are rotated one bit to the right through the Carry Flag. If 'd' is 0, the result is placed in WREG. If 'd' is 1, the result is placed back in register 'f' (default). If 'a' is 0, the Access Bank will be selected, overriding the BSR value. If 'a' is 1, then the bank will be selected as per the BSR value (default).

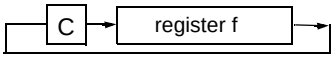

Words:	1
Cycles:	1

Q Cycle Activity:

Q1	Q2	Q3	Q4
Decode	Read register 'f'	Process Data	Write to destination

Example: `RRCF REG, 0, 0`

Before Instruction
```
REG     =   1110 0110
C       =   0
```
After Instruction
```
REG     =   1110 0110
WREG    =   0111 0011
C       =   0
```

RRNCF	Rotate Right f (no carry)
Syntax:	[*label*] RRNCF f,d,a
Operands:	$0 \le f \le 255$ $d \in [0,1]$ $a \in [0,1]$
Operation:	(f<n>) → dest<n-1>, (f<0>) → dest<7>
Status Affected:	N,Z
Encoding:	0100 | 00da | ffff | ffff
Description:	The contents of register 'f' are rotated one bit to the right. If 'd' is 0, the result is placed in WREG. If 'd' is 1, the result is placed back in register 'f' (default). If 'a' is 0, the Access Bank will be selected, overriding the BSR value. If 'a' is 1, then the bank will be selected as per the BSR value (default).

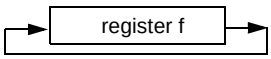

Words:	1
Cycles:	1

Q Cycle Activity:

Q1	Q2	Q3	Q4
Decode	Read register 'f'	Process Data	Write to destination

Example 1: `RRNCF REG, 1, 0`

Before Instruction
```
REG     =   1101 0111
```
After Instruction
```
REG     =   1110 1011
```

Example 2: `RRNCF REG, 0, 0`

Before Instruction
```
WREG    =   ?
REG     =   1101 0111
```
After Instruction
```
WREG    =   1110 1011
REG     =   1101 0111
```

SETF	Set f
Syntax:	[*label*] SETF f,a
Operands:	$0 \le f \le 255$ $a \in [0,1]$
Operation:	FFh → f
Status Affected:	None
Encoding:	0110 | 100a | ffff | ffff
Description:	The contents of the specified register are set to FFh. If 'a' is 0, the Access Bank will be selected, overriding the BSR value. If 'a' is 1, then the bank will be selected as per the BSR value (default).
Words:	1
Cycles:	1

Q Cycle Activity:

Q1	Q2	Q3	Q4
Decode	Read register 'f'	Process Data	Write register 'f'

Example: `SETF REG,1`

Before Instruction
```
REG     =   0x5A
```
After Instruction
```
REG     =   0xFF
```

SLEEP	Enter SLEEP mode
Syntax:	[*label*] SLEEP
Operands:	None
Operation:	00h → WDT, 0 → WDT postscaler, 1 → $\overline{TO}$, 0 → $\overline{PD}$
Status Affected:	$\overline{TO}$, $\overline{PD}$
Encoding:	0000 0000 0000 0011
Description:	The power-down status bit ($\overline{PD}$) is cleared. The time-out status bit ($\overline{TO}$) is set. Watchdog Timer and its postscaler are cleared. The processor is put into SLEEP mode with the oscillator stopped.
Words:	1
Cycles:	1

Q Cycle Activity:

Q1	Q2	Q3	Q4
Decode	No operation	Process Data	Go to sleep

Example: SLEEP

Before Instruction
$\overline{TO}$ = ?
$\overline{PD}$ = ?

After Instruction
$\overline{TO}$ = 1 †
$\overline{PD}$ = 0

† If WDT causes wake-up, this bit is cleared

SUBFWB	Subtract f from WREG with borrow
Syntax:	[*label*] SUBFWB f,d,a
Operands:	$0 \le f \le 255$ $d \in [0,1]$ $a \in [0,1]$
Operation:	(WREG) – (f) – ($\overline{C}$) → dest
Status Affected:	N,OV, C, DC, Z
Encoding:	0101 01da ffff ffff
Description:	Subtract register 'f' and carry flag (borrow) from WREG (2's complement method). If 'd' is 0, the result is stored in WREG. If 'd' is 1, the result is stored in register 'f' (default) . If 'a' is 0, the Access Bank will be selected, overriding the BSR value. If 'a' is 1, then the bank will be selected as per the BSR value (default).
Words:	1
Cycles:	1

Q Cycle Activity:

Q1	Q2	Q3	Q4
Decode	Read register 'f'	Process Data	Write to destination

SUBFWB

Example 1: `SUBFWB REG, 1, 0`

Before Instruction
```
REG    =  3
WREG   =  2
C      =  1
```
After Instruction
```
REG    =  FF
WREG   =  2
C      =  0
Z      =  0
N      =  1      ; result is negative
```

Example 2: `SUBFWB REG, 0, 0`

Before Instruction
```
REG    =  2
WREG   =  5
C      =  1
```
After Instruction
```
REG    =  2
WREG   =  3
C      =  1
Z      =  0
N      =  0      ; result is positive
```

Example 3: `SUBFWB REG, 1, 0`

Before Instruction
```
REG    =  1
WREG   =  2
C      =  0
```
After Instruction
```
REG    =  0
WREG   =  2
C      =  1
Z      =  1      ; result is zero
N      =  0
```

SUBLW — Subtract WREG from literal

Syntax:	[*label*] SUBLW k
Operands:	$0 \le k \le 255$
Operation:	k – (WREG) → WREG
Status Affected:	N,OV, C, DC, Z
Encoding:	0000 | 1000 | kkkk | kkkk
Description:	WREG is subtracted from the eight bit literal 'k'. The result is placed in WREG.
Words:	1
Cycles:	1

Q Cycle Activity:

Q1	Q2	Q3	Q4
Decode	Read literal 'k'	Process Data	Write to WREG

Example 1: `SUBLW 0x02`

Before Instruction
```
WREG   =  1
C      =  ?
```
After Instruction
```
WREG   =  1
C      =  1      ; result is positive
Z      =  0
N      =  0
```

Example 2: `SUBLW 0x02`

Before Instruction
```
WREG   =  2
C      =  ?
```
After Instruction
```
WREG   =  0
C      =  1      ; result is zero
Z      =  1
N      =  0
```

Example 3: `SUBLW 0x02`

Before Instruction
```
WREG   =  3
C      =  ?
```
After Instruction
```
WREG   =  FF   ; (2's complement)
C      =  0      ; result is negative
Z      =  0
N      =  1
```

SUBWF	Subtract WREG from f
Syntax:	[*label*] SUBWF f,d,a
Operands:	$0 \le f \le 255$ $d \in [0,1]$ $a \in [0,1]$
Operation:	(f) – (WREG) → dest
Status Affected:	N,OV, C, DC, Z
Encoding:	0101 | 11da | ffff | ffff
Description:	Subtract WREG from register 'f' (2's complement method). If 'd' is 0, the result is stored in WREG. If 'd' is 1, the result is stored back in register 'f' (default). If 'a' is 0, the Access Bank will be selected, overriding the BSR value. If 'a' is 1, then the bank will be selected as per the BSR value (default).
Words:	1
Cycles:	1

Q Cycle Activity:

Q1	Q2	Q3	Q4
Decode	Read register 'f'	Process Data	Write to destination

SUBWF — Subtract WREG from f (cont'd)

Example 1: `SUBWF REG, 1, 0`

Before Instruction
```
REG   =  3
WREG  =  2
C     =  ?
```
After Instruction
```
REG   =  1
WREG  =  2
C     =  1     ; result is positive
Z     =  0
N     =  0
```

Example 2: `SUBWF REG, 0, 0`

Before Instruction
```
REG   =  2
WREG  =  2
C     =  ?
```
After Instruction
```
REG   =  2
WREG  =  0
C     =  1     ; result is zero
Z     =  1
N     =  0
```

Example 3: `SUBWF REG, 1, 0`

Before Instruction
```
REG   =  1
WREG  =  2
C     =  ?
```
After Instruction
```
REG   =  FFh   ;(2's complement)
WREG  =  2
C     =  0     ; result is negative
Z     =  0
N     =  1
```

SUBWFB	Subtract WREG from f with Borrow
Syntax:	[*label*] SUBWFB f,d,a
Operands:	$0 \le f \le 255$ $d \in [0,1]$ $a \in [0,1]$
Operation:	(f) – (WREG) – ($\overline{C}$) → dest
Status Affected:	N,OV, C, DC, Z
Encoding:	0101 | 10da | ffff | ffff
Description:	Subtract WREG and the carry flag (borrow) from register 'f' (2's complement method). If 'd' is 0, the result is stored in WREG. If 'd' is 1, the result is stored back in register 'f' (default). If 'a' is 0, the Access Bank will be selected, overriding the BSR value. If 'a' is 1, then the bank will be selected as per the BSR value (default).
Words:	1
Cycles:	1

Q Cycle Activity:

Q1	Q2	Q3	Q4
Decode	Read register 'f'	Process Data	Write to destination

SUBWFB — **Subtract WREG from f with Borrow (cont'd)**

Example 1: `SUBWFB REG, 1, 0`

Before Instruction
```
REG    =  0x19        (0001 1001)
WREG   =  0x0D        (0000 1101)
C      =  1
```
After Instruction
```
REG    =  0x0C        (0000 1011)
WREG   =  0x0D        (0000 1101)
C      =  1
Z      =  0
N      =  0     ; result is positive
```

Example2: `SUBWFBREG, 0, 0`

Before Instruction
```
REG    =  0x1B        (0001 1011)
WREG   =  0x1A        (0001 1010)
C      =  0
```
After Instruction
```
REG    =  0x1B    (0001 1011)
WREG   =  0x00
C      =  1
Z      =  1     ; result is zero
N      =  0
```

Example3: `SUBWFBREG, 1, 0`

Before Instruction
```
REG    =  0x03        (0000 0011)
WREG   =  0x0E    (0000 1101)
C      =  1
```
After Instruction
```
REG    =  0xF5    (1111 0100) [2's
comp]
WREG   =  0x0E    (0000 1101)
C      =  0
Z      =  0
N      =  1     ; result is negative
```

SWAPF	**Swap f**
Syntax:	[*label*] SWAPF f,d,a
Operands:	$0 \le f \le 255$ $d \in [0,1]$ $a \in [0,1]$
Operation:	(f<3:0>) → dest<7:4>, (f<7:4>) → dest<3:0>
Status Affected:	None
Encoding:	`0011` `10da` `ffff` `ffff`
Description:	The upper and lower nibbles of register 'f' are exchanged. If 'd' is 0, the result is placed in WREG. If 'd' is 1, the result is placed in register 'f' (default). If 'a' is 0, the Access Bank will be selected, overriding the BSR value. If 'a' is 1, then the bank will be selected as per the BSR value (default).
Words:	1
Cycles:	1

Q Cycle Activity:

Q1	Q2	Q3	Q4
Decode	Read register 'f'	Process Data	Write to destination

Example: `SWAPF REG, 1, 0`

Before Instruction

```
REG    =   0x53
```

After Instruction

```
REG    =   0x35
```

TBLRD	Table Read
Syntax:	[*label*] TBLRD (*; *+; *-; +*)
Operands:	None
Operation:	if TBLRD *, (Prog Mem (TBLPTR)) → TABLAT; TBLPTR - No Change; if TBLRD *+, (Prog Mem (TBLPTR)) → TABLAT; (TBLPTR) +1 → TBLPTR; if TBLRD *-, (Prog Mem (TBLPTR)) → TABLAT; (TBLPTR) -1 → TBLPTR; if TBLRD +*, (TBLPTR) +1 → TBLPTR; (Prog Mem (TBLPTR)) → TABLAT;
Status Affected:	None
Encoding:	0000 0000 0000 10nn nn=0 * =1 *+ =2 *- =3 +*
Description:	This instruction is used to read the contents of Program Memory (P.M.). To address the program memory a pointer called Table Pointer (TBLPTR) is used. The TBLPTR (a 21-bit pointer) points to each byte in the program memory. TBLPTR has a 2 Mbyte address range. TBLPTR[0] = 0: Least Significant Byte of Program Memory Word TBLPTR[0] = 1: Most Significant Byte of Program Memory Word The TBLRD instruction can modify the value of TBLPTR as follows: • no change • post-increment • post-decrement • pre-increment
Words:	1
Cycles:	2

Q Cycle Activity:

Q1	Q2	Q3	Q4
Decode	No operation	No operation	No operation
No operation	No operation (Read Program Memory)	No operation	No operation (Write TABLAT)

TBLRD	Table Read (cont'd)

Example1: `TBLRD *+ ;`

Before Instruction

```
TABLAT              =   0x55
TBLPTR              =   0x00A356
MEMORY(0x00A356)    =   0x34
```

After Instruction

```
TABLAT              =   0x34
TBLPTR              =   0x00A357
```

Example2: `TBLRD +* ;`

Before Instruction

```
TABLAT              =   0xAA
TBLPTR              =   0x01A357
MEMORY(0x01A357)    =   0x12
MEMORY(0x01A358)    =   0x34
```

After Instruction

```
TABLAT              =   0x34
TBLPTR              =   0x01A358
```

TBLWT	Table Write
Syntax:	[*label*] TBLWT (*; *+; *-; +*)
Operands:	None
Operation:	if TBLWT*, (TABLAT) → Prog Mem (TBLPTR) or Holding Register; TBLPTR - No Change; if TBLWT*+, (TABLAT) → Prog Mem (TBLPTR) or Holding Register; (TBLPTR) +1 → TBLPTR; if TBLWT*-, (TABLAT) → Prog Mem (TBLPTR) or Holding Register; (TBLPTR) -1 → TBLPTR; if TBLWT+*, (TBLPTR) +1 → TBLPTR; (TABLAT) → Prog Mem (TBLPTR) or Holding Register;
Status Affected:	None
Encoding:	0000 0000 0000 11nn nn=0 * =1 *+ =2 *- =3 +*
Description:	This instruction is used to program the contents of Program Memory (P.M.). The TBLPTR (a 21-bit pointer) points to each byte in the program memory. TBLPTR has a 2 MBtye address range. The LSb of the TBLPTR selects which byte of the program memory location to access. TBLPTR[0] = 0:Least Significant Byte of Program Memory Word TBLPTR[0] = 1:Most Significant Byte of Program Memory Word The TBLWT instruction can modify the value of TBLPTR as follows: • no change • post-increment • post-decrement • pre-increment
Words:	1
Cycles:	2 (many if long write is to on-chip EPROM program memory)

Q Cycle Activity:

Q1	Q2	Q3	Q4
Decode	No operation	No operation	No operation
No operation	No operation (Read TABLAT)	No operation	No operation (Write to Holding Register or Memory)

TBLWT Table Write (cont.'d)

Example1: `TBLWT *+;`

Before Instruction

```
TABLAT              =   0x55
TBLPTR              =   0x00A356
MEMORY(0x00A356)    =   0xFF
```

After Instructions (table write completion)

```
TABLAT              =   0x55
TBLPTR              =   0x00A357
MEMORY(0x00A356)    =   0x55
```

Example 2: `TBLWT +*;`

Before Instruction

```
TABLAT              =   0x34
TBLPTR              =   0x01389A
MEMORY(0x01389A)    =   0xFF
MEMORY(0x01389B)    =   0xFF
```

After Instruction (table write completion)

```
TABLAT              =   0x34
TBLPTR              =   0x01389B
MEMORY(0x01389A)    =   0xFF
MEMORY(0x01389B)    =   0x34
```

TSTFSZ — Test f, skip if 0

Syntax: [*label*] TSTFSZ f,a

Operands: $0 \le f \le 255$
$a \in [0,1]$

Operation: skip if f = 0

Status Affected: None

Encoding:

0110	011a	ffff	ffff

Description: If 'f' = 0, the next instruction, fetched during the current instruction execution, is discarded and a NOP is executed making this a two-cycle instruction. If 'a' is 0, the Access Bank will be selected, overriding the BSR value. If 'a' is 1, then the bank will be selected as per the BSR value (default).

Words: 1

Cycles: 1(2)
Note: 3 cycles if skip and followed by a 2-word instruction

Q Cycle Activity:

Q1	Q2	Q3	Q4
Decode	Read register 'f'	Process Data	No operation

If skip:

Q1	Q2	Q3	Q4
No operation	No operation	No operation	No operation

If skip and followed by 2-word instruction:

Q1	Q2	Q3	Q4
No operation	No operation	No operation	No operation
No operation	No operation	No operation	No operation

Example:

```
HERE    TSTFSZ  CNT, 1
NZERO     :
ZERO    :
```

Before Instruction
```
PC = Address(HERE)
```
After Instruction
```
If CNT     =   0x00,
    PC     =   Address (ZERO)
If CNT     ≠   0x00,
    PC     =   Address (NZERO)
```

XORLW — Exclusive OR literal with WREG

Syntax: [*label*] XORLW k

Operands: $0 \le k \le 255$

Operation: (WREG) .XOR. k → WREG

Status Affected: N,Z

Encoding:

0000	1010	kkkk	kkkk

Description: The contents of WREG are XOR'ed with the 8-bit literal 'k'. The result is placed in WREG.

Words: 1

Cycles: 1

Q Cycle Activity:

Q1	Q2	Q3	Q4
Decode	Read literal 'k'	Process Data	Write to WREG

Example: XORLW 0xAF

Before Instruction
```
WREG    =   0xB5
```
After Instruction
```
WREG    =   0x1A
```

XORWF	**Exclusive OR WREG with f**
Syntax:	[*label*] XORWF f,d,a
Operands:	$0 \le f \le 255$ $d \in [0,1]$ $a \in [0,1]$
Operation:	(WREG) .XOR. (f) → dest
Status Affected:	N,Z
Encoding:	`0001` `10da` `ffff` `ffff`
Description:	Exclusive OR the contents of WREG with register 'f'. If 'd' is 0, the result is stored in WREG. If 'd' is 1, the result is stored back in the register 'f' (default). If 'a' is 0, the Access Bank will be selected, overriding the BSR value. If 'a' is 1, then the bank will be selected as per the BSR value (default).
Words:	1
Cycles:	1

Q Cycle Activity:

Q1	Q2	Q3	Q4
Decode	Read register 'f'	Process Data	Write to destination

Example: XORWF REG, 1, 0

Before Instruction

```
REG    =   0xAF
WREG   =   0xB5
```

After Instruction

```
REG    =   0x1A
WREG   =   0xB5
```

20.0 DEVELOPMENT SUPPORT

The PICmicro® microcontrollers are supported with a full range of hardware and software development tools:

- Integrated Development Environment
  - MPLAB™ IDE Software
- Assemblers/Compilers/Linkers
  - MPASM Assembler
  - MPLAB-C17 and MPLAB-C18 C Compilers
  - MPLINK/MPLIB Linker/Librarian
- Simulators
  - MPLAB-SIM Software Simulator
- Emulators
  - MPLAB-ICE Real-Time In-Circuit Emulator
  - PICMASTER®/PICMASTER-CE In-Circuit Emulator
  - ICEPIC™
- In-Circuit Debugger
  - MPLAB-ICD for PIC16F877
- Device Programmers
  - PRO MATE® II Universal Programmer
  - PICSTART® Plus Entry-Level Prototype Programmer
- Low-Cost Demonstration Boards
  - SIMICE
  - PICDEM-1
  - PICDEM-2
  - PICDEM-3
  - PICDEM-17
  - SEEVAL®
  - KEELOQ®

20.1 MPLAB Integrated Development Environment Software

- The MPLAB IDE software brings an ease of software development previously unseen in the 8-bit microcontroller market. MPLAB is a Windows®-based application which contains:
- Multiple functionality
  - editor
  - simulator
  - programmer (sold separately)
  - emulator (sold separately)
- A full featured editor
- A project manager
- Customizable tool bar and key mapping
- A status bar
- On-line help

MPLAB allows you to:

- Edit your source files (either assembly or ‘C’)
- One touch assemble (or compile) and download to PICmicro tools (automatically updates all project information)
- Debug using:
  - source files
  - absolute listing file
  - object code

The ability to use MPLAB with Microchip’s simulator, MPLAB-SIM, allows a consistent platform and the ability to easily switch from the cost-effective simulator to the full featured emulator with minimal retraining.

20.2 MPASM Assembler

MPASM is a full featured universal macro assembler for all PICmicro MCU’s. It can produce absolute code directly in the form of HEX files for device programmers, or it can generate relocatable objects for MPLINK.

MPASM has a command line interface and a Windows shell and can be used as a standalone application on a Windows 3.x or greater system. MPASM generates relocatable object files, Intel standard HEX files, MAP files to detail memory usage and symbol reference, an absolute LST file which contains source lines and generated machine code, and a COD file for MPLAB debugging.

MPASM features include:

- MPASM and MPLINK are integrated into MPLAB projects.
- MPASM allows user defined macros to be created for streamlined assembly.
- MPASM allows conditional assembly for multi purpose source files.
- MPASM directives allow complete control over the assembly process.

20.3 MPLAB-C17 and MPLAB-C18 C Compilers

The MPLAB-C17 and MPLAB-C18 Code Development Systems are complete ANSI ‘C’ compilers and integrated development environments for Microchip’s PIC17CXXX and PIC18CXXX family of microcontrollers, respectively. These compilers provide powerful integration capabilities and ease of use not found with other compilers.

For easier source level debugging, the compilers provide symbol information that is compatible with the MPLAB IDE memory display.

20.4 MPLINK/MPLIB Linker/Librarian

MPLINK is a relocatable linker for MPASM and MPLAB-C17 and MPLAB-C18. It can link relocatable objects from assembly or C source files along with pre-compiled libraries using directives from a linker script.

MPLIB is a librarian for pre-compiled code to be used with MPLINK. When a routine from a library is called from another source file, only the modules that contains that routine will be linked in with the application. This allows large libraries to be used efficiently in many different applications. MPLIB manages the creation and modification of library files.

MPLINK features include:

- MPLINK works with MPASM and MPLAB-C17 and MPLAB-C18.
- MPLINK allows all memory areas to be defined as sections to provide link-time flexibility.

MPLIB features include:

- MPLIB makes linking easier because single libraries can be included instead of many smaller files.
- MPLIB helps keep code maintainable by grouping related modules together.
- MPLIB commands allow libraries to be created and modules to be added, listed, replaced, deleted, or extracted.

20.5 MPLAB-SIM Software Simulator

The MPLAB-SIM Software Simulator allows code development in a PC host environment by simulating the PICmicro series microcontrollers on an instruction level. On any given instruction, the data areas can be examined or modified and stimuli can be applied from a file or user-defined key press to any of the pins. The execution can be performed in single step, execute until break, or trace mode.

MPLAB-SIM fully supports symbolic debugging using MPLAB-C17 and MPLAB-C18 and MPASM. The Software Simulator offers the flexibility to develop and debug code outside of the laboratory environment making it an excellent multi-project software development tool.

20.6 MPLAB-ICE High Performance Universal In-Circuit Emulator with MPLAB IDE

The MPLAB-ICE Universal In-Circuit Emulator is intended to provide the product development engineer with a complete microcontroller design tool set for PICmicro microcontrollers (MCUs). Software control of MPLAB-ICE is provided by the MPLAB Integrated Development Environment (IDE), which allows editing, “make” and download, and source debugging from a single environment.

Interchangeable processor modules allow the system to be easily reconfigured for emulation of different processors. The universal architecture of the MPLAB-ICE allows expansion to support new PICmicro microcontrollers.

The MPLAB-ICE Emulator System has been designed as a real-time emulation system with advanced features that are generally found on more expensive development tools. The PC platform and Microsoft® Windows 3.x/95/98 environment were chosen to best make these features available to you, the end user.

MPLAB-ICE 2000 is a full-featured emulator system with enhanced trace, trigger, and data monitoring features. Both systems use the same processor modules and will operate across the full operating speed range of the PICmicro MCU.

20.7 PICMASTER/PICMASTER CE

The PICMASTER system from Microchip Technology is a full-featured, professional quality emulator system. This flexible in-circuit emulator provides a high-quality, universal platform for emulating Microchip 8-bit PICmicro microcontrollers (MCUs). PICMASTER systems are sold worldwide, with a CE compliant model available for European Union (EU) countries.

20.8 ICEPIC

ICEPIC is a low-cost in-circuit emulation solution for the Microchip Technology PIC16C5X, PIC16C6X, PIC16C7X, and PIC16CXXX families of 8-bit one-time-programmable (OTP) microcontrollers. The modular system can support different subsets of PIC16C5X or PIC16CXXX products through the use of interchangeable personality modules or daughter boards. The emulator is capable of emulating without target application circuitry being present.

20.9 MPLAB-ICD In-Circuit Debugger

Microchip’s In-Circuit Debugger, MPLAB-ICD, is a powerful, low-cost run-time development tool. This tool is based on the flash PIC16F877 and can be used to develop for this and other PICmicro microcontrollers from the PIC16CXXX family. MPLAB-ICD utilizes the In-Circuit Debugging capability built into the PIC16F87X. This feature, along with Microchip’s In-Circuit Serial Programming protocol, offers cost-effective in-circuit flash programming and debugging from the graphical user interface of the MPLAB Integrated Development Environment. This enables a designer to develop and debug source code by watching variables, single-stepping and setting break points. Running at full speed enables testing hardware in real-time. The MPLAB-ICD is also a programmer for the flash PIC16F87X family.

20.10 PRO MATE II Universal Programmer

The PRO MATE II Universal Programmer is a full-featured programmer capable of operating in stand-alone mode as well as PC-hosted mode. PRO MATE II is CE compliant.

The PRO MATE II has programmable V_{DD} and V_{PP} supplies which allows it to verify programmed memory at V_{DD} min and V_{DD} max for maximum reliability. It has an LCD display for instructions and error messages, keys to enter commands and a modular detachable socket assembly to support various package types. In stand-alone mode the PRO MATE II can read, verify or program PICmicro devices. It can also set code-protect bits in this mode.

20.11 PICSTART Plus Entry Level Development System

The PICSTART programmer is an easy-to-use, low-cost prototype programmer. It connects to the PC via one of the COM (RS-232) ports. MPLAB Integrated Development Environment software makes using the programmer simple and efficient.

PICSTART Plus supports all PICmicro devices with up to 40 pins. Larger pin count devices such as the PIC16C92X, and PIC17C76X may be supported with an adapter socket. PICSTART Plus is CE compliant.

20.12 SIMICE Entry-Level Hardware Simulator

SIMICE is an entry-level hardware development system designed to operate in a PC-based environment with Microchip's simulator MPLAB-SIM. Both SIMICE and MPLAB-SIM run under Microchip Technology's MPLAB Integrated Development Environment (IDE) software. Specifically, SIMICE provides hardware simulation for Microchip's PIC12C5XX, PIC12CE5XX, and PIC16C5X families of PICmicro 8-bit microcontrollers. SIMICE works in conjunction with MPLAB-SIM to provide non-real-time I/O port emulation. SIMICE enables a developer to run simulator code for driving the target system. In addition, the target system can provide input to the simulator code. This capability allows for simple and interactive debugging without having to manually generate MPLAB-SIM stimulus files. SIMICE is a valuable debugging tool for entry-level system development.

20.13 PICDEM-1 Low-Cost PICmicro Demonstration Board

The PICDEM-1 is a simple board which demonstrates the capabilities of several of Microchip's microcontrollers. The microcontrollers supported are: PIC16C5X (PIC16C54 to PIC16C58A), PIC16C61, PIC16C62X, PIC16C71, PIC16C8X, PIC17C42, PIC17C43 and PIC17C44. All necessary hardware and software is included to run basic demo programs. The users can program the sample microcontrollers provided with the PICDEM-1 board, on a PRO MATE II or PICSTART-Plus programmer, and easily test firmware. The user can also connect the PICDEM-1 board to the MPLAB-ICE emulator and download the firmware to the emulator for testing. Additional prototype area is available for the user to build some additional hardware and connect it to the microcontroller socket(s). Some of the features include an RS-232 interface, a potentiometer for simulated analog input, push-button switches and eight LEDs connected to PORTB.

20.14 PICDEM-2 Low-Cost PIC16CXX Demonstration Board

The PICDEM-2 is a simple demonstration board that supports the PIC16C62, PIC16C64, PIC16C65, PIC16C73 and PIC16C74 microcontrollers. All the necessary hardware and software is included to run the basic demonstration programs. The user can program the sample microcontrollers provided with the PICDEM-2 board, on a PRO MATE II programmer or PICSTART-Plus, and easily test firmware. The MPLAB-ICE emulator may also be used with the PICDEM-2 board to test firmware. Additional prototype area has been provided to the user for adding additional hardware and connecting it to the microcontroller socket(s). Some of the features include a RS-232 interface, push-button switches, a potentiometer for simulated analog input, a Serial EEPROM to demonstrate usage of the I^2C bus and separate headers for connection to an LCD module and a keypad.

20.15 PICDEM-3 Low-Cost PIC16CXXX Demonstration Board

The PICDEM-3 is a simple demonstration board that supports the PIC16C923 and PIC16C924 in the PLCC package. It will also support future 44-pin PLCC microcontrollers with a LCD Module. All the necessary hardware and software is included to run the basic demonstration programs. The user can program the sample microcontrollers provided with the PICDEM-3 board, on a PRO MATE II programmer or PICSTART Plus with an adapter socket, and easily test firmware. The MPLAB-ICE emulator may also be used with the PICDEM-3 board to test firmware. Additional prototype area has been provided to the user for adding hardware and connecting it to the microcontroller socket(s). Some of the features include an RS-232 interface, push-button switches, a potentiometer for simulated analog input, a thermistor and separate headers for connection to an external LCD module and a keypad. Also provided on the PICDEM-3 board is an LCD panel, with 4 commons and 12 segments, that is capable of displaying time, temperature and day of the week. The PICDEM-3 provides an additional RS-232 interface and Windows 3.1 software for showing the demultiplexed LCD signals on a PC. A simple serial interface allows the user to construct a hardware demultiplexer for the LCD signals.

20.16 PICDEM-17

The PICDEM-17 is an evaluation board that demonstrates the capabilities of several Microchip microcontrollers, including PIC17C752, PIC17C756, PIC17C762, and PIC17C766. All necessary hardware is included to run basic demo programs, which are supplied on a 3.5-inch disk. A programmed sample is included, and the user may erase it and program it with the other sample programs using the PRO MATE II or PICSTART Plus device programmers and easily debug and test the sample code. In addition, PICDEM-17 supports down-loading of programs to and executing out of external FLASH memory on board. The PICDEM-17 is also usable with the MPLAB-ICE or PICMASTER emulator, and all of the sample programs can be run and modified using either emulator. Additionally, a generous prototype area is available for user hardware.

20.17 SEEVAL Evaluation and Programming System

The SEEVAL SEEPROM Designer's Kit supports all Microchip 2-wire and 3-wire Serial EEPROMs. The kit includes everything necessary to read, write, erase or program special features of any Microchip SEEPROM product including Smart Serials™ and secure serials. The Total Endurance™ Disk is included to aid in trade-off analysis and reliability calculations. The total kit can significantly reduce time-to-market and result in an optimized system.

20.18 KEELOQ Evaluation and Programming Tools

KEELOQ evaluation and programming tools support Microchips HCS Secure Data Products. The HCS evaluation kit includes an LCD display to show changing codes, a decoder to decode transmissions, and a programming interface to program test transmitters.

TABLE 20-1: DEVELOPMENT TOOLS FROM MICROCHIP

		PIC12CXXX	PIC14000	PIC16C5X	PIC16C6X	PIC16CXXX	PIC16F62X	PIC16C7X	PIC16C7XX	PIC16C8X	PIC16F8XX	PIC16C9XX	PIC17C4X	PIC17C7XX	PIC18CXX2	24CXX/ 25CXX/ 93CXX	HCSXXX	MCRFXXX	MCP2510
Software Tools	MPLAB™ Integrated Development Environment	✓	✓	✓	✓	✓	✓	✓	✓	✓	✓	✓	✓	✓	✓				
	MPLAB™ C17 Compiler												✓	✓					
	MPLAB™ C18 Compiler														✓				
	MPASM/MPLINK	✓	✓	✓	✓	✓	✓	✓	✓	✓	✓	✓	✓	✓	✓	✓	✓		
Emulators	MPLAB™-ICE	✓	✓	✓	✓	✓	✓**	✓	✓	✓	✓	✓	✓	✓	✓				
	PICMASTER/PICMASTER-CE	✓	✓	✓	✓	✓		✓	✓	✓		✓	✓	✓					
	ICEPIC™ Low-Cost In-Circuit Emulator	✓		✓	✓	✓		✓	✓	✓		✓							
Debugger	MPLAB-ICD In-Circuit Debugger				✓*			✓*			✓								
Programmers	PICSTART® Plus Low-Cost Universal Dev. Kit	✓	✓	✓	✓	✓	✓**	✓	✓	✓	✓	✓	✓	✓	✓				
	PRO MATE® II Universal Programmer	✓	✓	✓	✓	✓	✓**	✓	✓	✓	✓	✓	✓	✓	✓	✓	✓		
Demo Boards and Eval Kits	SIMICE	✓		✓															
	PICDEM-1			✓		✓		✓†		✓			✓						
	PICDEM-2				✓†			✓†							✓				
	PICDEM-3											✓							
	PICDEM-14A		✓																
	PICDEM-17													✓					
	KEELOQ® Evaluation Kit																✓		
	KEELOQ Transponder Kit																✓		
	microID™ Programmer's Kit																	✓	
	125 kHz microID Developer's Kit																	✓	
	125 kHz Anticollision microID Developer's Kit																	✓	
	13.56 MHz Anticollision microID Developer's Kit																	✓	
	MCP2510 CAN Developer's Kit																		✓

* Contact the Microchip Technology Inc. web site at www.microchip.com for information on how to use the MPLAB-ICD In-Circuit Debugger (DV164001) with PIC16C62, 63, 64, 65, 72, 73, 74, 76, 77

** Contact Microchip Technology Inc. for availability date.

† Development tool is available on select devices.

NOTES:

21.0 ELECTRICAL CHARACTERISTICS

Absolute Maximum Ratings (†)

Ambient temperature under bias ..... -55°C to +125°C
Storage temperature ..... -65°C to +150°C
Voltage on any pin with respect to V_{SS} (except V_{DD}, $\overline{MCLR}$, and RA4) ..... -0.3V to (V_{DD} + 0.3V)
Voltage on V_{DD} with respect to V_{SS} ..... -0.3V to +7.5V
Voltage on $\overline{MCLR}$ with respect to V_{SS} (Note 2) ..... 0V to +13.25V
Voltage on RA4 with respect to Vss ..... 0V to +8.5V
Total power dissipation (Note 1) 1.0W
Maximum current out of V_{SS} pin ..... 300 mA
Maximum current into V_{DD} pin ..... 250 mA
Input clamp current, I_{IK} (V_I < 0 or V_I > V_{DD}) ..... ±20 mA
Output clamp current, I_{OK} (V_O < 0 or V_O > V_{DD}) ..... ±20 mA
Maximum output current sunk by any I/O pin ..... 25 mA
Maximum output current sourced by any I/O pin ..... 25 mA
Maximum current sunk by PORTA, PORTB, and PORTE (Note 3) (combined) ..... 200 mA
Maximum current sourced by PORTA, PORTB, and PORTE (Note 3) (combined) ..... 200 mA
Maximum current sunk by PORTC and PORTD (Note 3) (combined) ..... 200 mA
Maximum current sourced by PORTC and PORTD (Note 3) (combined) ..... 200 mA

Note 1: Power dissipation is calculated as follows:
$P_{dis} = V_{DD} \times \{I_{DD} - \sum I_{OH}\} + \sum \{(V_{DD}-V_{OH}) \times I_{OH}\} + \sum(V_{ol} \times I_{OL})$

Note 2: Voltage spikes below V_{SS} at the $\overline{MCLR}/V_{PP}$ pin, inducing currents greater than 80 mA, may cause latch-up. Thus, a series resistor of 50-100Ω should be used when applying a “low” level to the $\overline{MCLR}/V_{PP}$ pin, rather than pulling this pin directly to V_{SS}.

Note 3: PORTD and PORTE not available on the PIC18C2X2 devices.

† NOTICE: Stresses above those listed under “Absolute Maximum Ratings” may cause permanent damage to the device. This is a stress rating only and functional operation of the device at those or any other conditions above those indicated in the operation listings of this specification is not implied. Exposure to maximum rating conditions for extended periods may affect device reliability.

FIGURE 21-1: PIC18CXX2 VOLTAGE-FREQUENCY GRAPH (INDUSTRIAL)

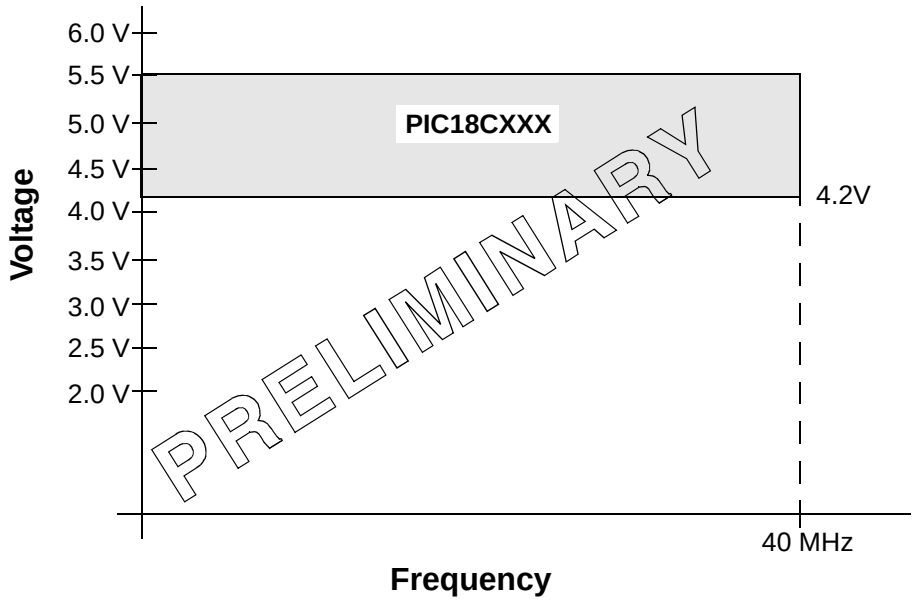

FIGURE 21-2: PIC18LCXX2 VOLTAGE-FREQUENCY GRAPH (INDUSTRIAL)

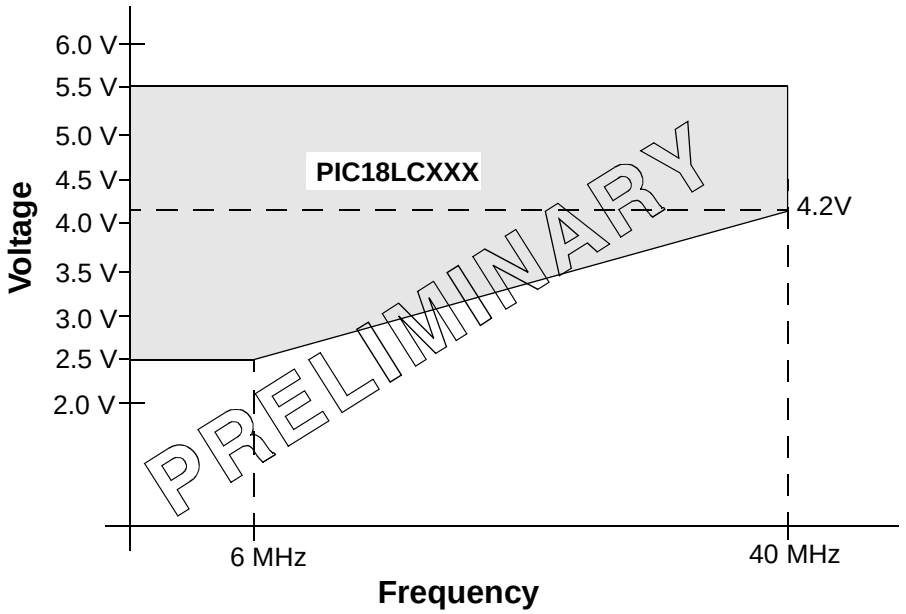

F_{MAX} = (20.0 MHz/V) ($V_{DDAPPMIN}$ - 2.5 V) + 6 MHz

Note: $V_{DDAPPMIN}$ is the minimum voltage of the PICmicro® device in the application

21.1 DC Characteristics: PIC18CXX2 (Industrial, Extended)

DC CHARACTERISTICS			Standard Operating Conditions (unless otherwise stated) Operating temperature -40°C ≤ TA ≤ +85°C for industrial -40°C ≤ TA ≤ +125°C for extended				
Param No.	**Symbol**	**Characteristic**	**Min**	**Typ**	**Max**	**Units**	**Conditions**
D001	VDD	**Supply Voltage**	4.2	—	5.5	V	
D002	VDR	**RAM Data Retention Voltage(1)**	1.5	—	—	V	
D003	VPOR	**VDD Start Voltage** to ensure internal Power-on Reset signal	—	—	0.7	V	See section on Power-on Reset for details
D004	SVDD	**VDD Rise Rate** to ensure internal Power-on Reset signal	0.05	—	—	V/ms	See section on Power-on Reset for details
D005	VBOR	**Brown-out Reset Voltage**					
		BORV1:BORV0 = 1x	N.A.	—	N.A.	V	Not in operating voltage range of device
		BORV1:BORV0 = 01	4.2	—	4.46	V	
		BORV1:BORV0 = 00	4.5	—	4.78	V	
D010	IDD	**Supply Current(2,4)**	—	—	TBD	mA	XT, RC, RCIO osc configurations FOSC = 4 MHz, VDD = 4.2V
D010A			—	—	TBD	µA	LP osc configuration FOSC = 32 kHz, VDD = 4.2V
D010C			—	—	45	mA	EC, ECIO osc configurations, Fosc = 40 MHz, VDD = 5.5V
D013			—	—	50	mA	HS osc configurations Fosc = 25 MHz, VDD = 5.5V
D013			—	—	50	mA	HS + PLL osc configuration Fosc = 10 MHz, VDD = 5.5V
D014			—	—	TBD	µA	OSCB osc configuration FOSC = 32 kHz, VDD = 4.2V
			—	—	TBD	µA	FOSC = 32 kHz, VDD = 4.2V, 25°C

Legend: Shading of rows is to assist in readability of the table.

Note 1: This is the limit to which VDD can be lowered in SLEEP mode or during a device reset without losing RAM data.

2: The supply current is mainly a function of the operating voltage and frequency. Other factors, such as I/O pin loading and switching rate, oscillator type, internal code execution pattern and temperature, also have an impact on the current consumption.
The test conditions for all IDD measurements in active operation mode are:
OSC1 = external square wave, from rail to rail; all I/O pins tristated, pulled to VDD
$\overline{\text{MCLR}}$ = VDD; WDT enabled/disabled as specified.

3: The power-down current in SLEEP mode does not depend on the oscillator type. Power-down current is measured with the part in SLEEP mode, with all I/O pins in hi-impedance state and tied to VDD or VSS, and all features that add delta current disabled (such as WDT, Timer1 Oscillator, BOR, ...).

4: For RC osc configuration, current through Rext is not included. The current through the resistor can be estimated by the formula Ir = VDD/2Rext (mA) with Rext in kOhm.

21.1 DC Characteristics: PIC18CXX2 (Industrial, Extended) (cont'd)

DC CHARACTERISTICS			Standard Operating Conditions (unless otherwise stated) Operating temperature -40°C ≤ TA ≤ +85°C for industrial -40°C ≤ TA ≤ +125°C for extended				
Param No.	Symbol	Characteristic	Min	Typ	Max	Units	Conditions
	IPD	**Power-down Current(3)**					
D020			—	<1	TBD	μA	VDD = 4.2V, -40°C to +85°C
			—	—	36	μA	VDD = 5.5V, -40°C to +85°C
D020A			—	—	TBD	μA	VDD = 4.2V, 25°C
D021B			—	<TBD	TBD	μA	VDD = 4.2V, -40°C to +125°C
			—	—	42		VDD = 5.5V, -40°C to +125°C
		Module Differential Current					
D022	ΔIWDT	Watchdog Timer	—	—	25	μA	VDD = 5.5V, -40°C to +85°C
			—	—	TBD	μA	VDD = 5.5V, -40°C to +125°C
			—	—	TBD	μA	VDD = 4.2V, 25°C
D022A	ΔIBOR	Brown-out Reset	—	—	50	μA	VDD = 5.5V, -40°C to +85°C
			—	—	TBD	μA	VDD = 5.5V, -40°C to +125°
			—	—	TBD	μA	VDD = 4.2V, 25°C
D022B	ΔILVD	Low Voltage Detect	—	—	TBD	μA	VDD = 4.2V, -40°C to +85°C
			—	—	TBD	μA	VDD = 4.2V, -40°C to +125°C
			—	—	TBD	μA	VDD = 4.2V, 25°C
D025	ΔIOSCB	Timer1 Oscillator	—	—	TBD	μA	VDD = 4.2V, -40°C to +85°C
			—	—	TBD	μA	VDD = 4.2V, -40°C to +125°C
			—	—	TBD	μA	VDD = 4.2V, 25°C

Legend: Shading of rows is to assist in readability of the table.

Note 1: This is the limit to which VDD can be lowered in SLEEP mode or during a device reset without losing RAM data.

2: The supply current is mainly a function of the operating voltage and frequency. Other factors such as I/O pin loading and switching rate, oscillator type, internal code execution pattern, and temperature also have an impact on the current consumption.
The test conditions for all IDD measurements in active operation mode are:
OSC1 = external square wave, from rail to rail; all I/O pins tristated, pulled to VDD
$\overline{\text{MCLR}}$ = VDD; WDT enabled/disabled as specified.

3: The power-down current in SLEEP mode does not depend on the oscillator type. Power-down current is measured with the part in SLEEP mode, with all I/O pins in hi-impedance state and tied to VDD and VSS, and all features that add delta current disabled (such as WDT, Timer1 Oscillator, BOR, ...).

4: For RC osc configuration, current through Rext is not included. The current through the resistor can be estimated by the formula Ir = VDD/2Rext (mA) with Rext in kOhm.

21.2 DC Characteristics: PIC18LCXX2 (Industrial)

DC CHARACTERISTICS			Standard Operating Conditions (unless otherwise stated) Operating temperature -40°C ≤ TA ≤ +85°C for industrial				
Param No.	**Symbol**	**Characteristic**	**Min**	**Typ**	**Max**	**Units**	**Conditions**
D001	VDD	**Supply Voltage**	2.5	—	5.5	V	HS, XT, RC and LP osc mode
D002	VDR	**RAM Data Retention Voltage(1)**	1.5	—	—	V	
D003	VPOR	**VDD Start Voltage** to ensure internal Power-on Reset signal	—	—	0.7	V	See section on Power-on Reset for details
D004	SVDD	**VDD Rise Rate** to ensure internal Power-on Reset signal	0.05	—	—	V/ms	See section on Power-on Reset for details
D005	VBOR	**Brown-out Reset Voltage**					
		BORV1:BORV0 = 11	2.5	—	2.66	V	
		BORV1:BORV0 = 10	2.7	—	2.86	V	
		BORV1:BORV0 = 01	4.2	—	4.46	V	
		BORV1:BORV0 = 00	4.5	—	4.78	V	
D010	IDD	**Supply Current(2,4)**	—	—	4	mA	XT, RC, RCIO osc configurations FOSC = 4 MHz, VDD = 2.5V
D010A			—	—	48	µA	LP osc configuration FOSC = 32 kHz, VDD = 2.5V
D010C			—	—	45	mA	EC, ECIO osc configurations, Fosc = 40 MHz, VDD = 5.5V
D013			— —	— —	TBD 50	mA mA	HS osc configurations Fosc = 6 MHz, VDD = 2.5V Fosc = 25 MHz, VDD = 5.5V
D013			—	—	50	mA	HS + PLL osc configuration Fosc = 10 MHz, VDD = 5.5V
D014			— —	— —	48 TBD	µA µA	Timer1 osc configuration FOSC = 32 kHz, VDD = 2.5V FOSC = 32 kHz, VDD = 2.5V, 25°C

Legend: Shading of rows is to assist in readability of the table.

Note 1: This is the limit to which VDD can be lowered in SLEEP mode or during a device reset without losing RAM data.

2: The supply current is mainly a function of the operating voltage and frequency. Other factors, such as I/O pin loading and switching rate, oscillator type, internal code execution pattern and temperature, also have an impact on the current consumption.
The test conditions for all IDD measurements in active operation mode are:
OSC1 = external square wave, from rail to rail; all I/O pins tristated, pulled to VDD
$\overline{\text{MCLR}}$ = VDD; WDT enabled/disabled as specified.

3: The power-down current in SLEEP mode does not depend on the oscillator type. Power-down current is measured with the part in SLEEP mode, with all I/O pins in hi-impedance state and tied to VDD or VSS, and all features that add delta current disabled (such as WDT, Timer1 Oscillator, BOR, ...).

4: For RC osc configuration, current through Rext is not included. The current through the resistor can be estimated by the formula Ir = VDD/2Rext (mA) with Rext in kOhm.

21.2 DC Characteristics: PIC18LCXX2 (Industrial) (cont'd)

DC CHARACTERISTICS			Standard Operating Conditions (unless otherwise stated) Operating temperature -40°C ≤ TA ≤ +85°C for industrial				
Param No.	**Symbol**	**Characteristic**	**Min**	**Typ**	**Max**	**Units**	**Conditions**
D020	IPD	**Power-down Current(3)**	— — —	<2.5 — —	5 36 TBD	μA μA μA	VDD = 2.5V, -40°C to +85°C VDD = 5.5V, -40°C to +85°C VDD = 2.5V, 25°C
		Module Differential Current					
D022	ΔIWDT	Watchdog Timer	— — —	— — —	12 25 TBD	μA μA μA	VDD = 2.5V VDD = 5.5V VDD = 2.5V, 25°C
D022A	ΔIBOR	Brown-out Reset	— —	— —	50 TBD	μA μA	VDD = 5.5V VDD = 2.5V, 25°C
D022B	ΔILVD	Low Voltage Detect	— —	— —	50 TBD	μA μA	VDD = 2.5V VDD = 2.5V, 25°C
D025	ΔIOSCB	Timer1 oscillator	— —	— —	3 TBD	μA μA	VDD = 2.5V VDD = 2.5V, 25°C

Legend: Shading of rows is to assist in readability of the table.

Note 1: This is the limit to which VDD can be lowered in SLEEP mode or during a device reset without losing RAM data.

2: The supply current is mainly a function of the operating voltage and frequency. Other factors, such as I/O pin loading and switching rate, oscillator type, internal code execution pattern and temperature, also have an impact on the current consumption.
The test conditions for all IDD measurements in active operation mode are:
OSC1 = external square wave, from rail to rail; all I/O pins tristated, pulled to VDD
$\overline{\text{MCLR}}$ = VDD; WDT enabled/disabled as specified.

3: The power-down current in SLEEP mode does not depend on the oscillator type. Power-down current is measured with the part in SLEEP mode, with all I/O pins in hi-impedance state and tied to VDD and VSS, and all features that add delta current disabled (such as WDT, Timer1 Oscillator, BOR, ...).

4: For RC osc configuration, current through Rext is not included. The current through the resistor can be estimated by the formula Ir = VDD/2Rext (mA) with Rext in kOhm.

21.3 DC Characteristics: PIC18CXX2 (Industrial, Extended) and PIC18LCXX2 (Industrial)

DC CHARACTERISTICS			Standard Operating Conditions (unless otherwise stated) Operating temperature -40°C ≤ TA ≤ +85°C for industrial -40°C ≤ TA ≤ +125°C for extended			
Param No.	**Symbol**	**Characteristic**	**Min**	**Max**	**Units**	**Conditions**
	VIL	**Input Low Voltage**				
		I/O ports:				
D030		with TTL buffer	VSS	0.15VDD	V	VDD < 4.5V
D030A			—	0.8	V	4.5V ≤ VDD ≤ 5.5V
D031		with Schmitt Trigger buffer	VSS	0.2VDD	V	
		RC3 and RC4	VSS	0.3VDD	V	
D032		$\overline{\text{MCLR}}$	VSS	0.2VDD	V	
D032A		OSC1 (in XT, HS and LP modes) and T1OSI	VSS	0.3VDD	V	
D033		OSC1(in RC mode)(1)	VSS	0.2VDD	V	
	VIH	**Input High Voltage**				
		I/O ports:				
D040		with TTL buffer	0.25VDD + 0.8V	VDD	V	VDD < 4.5V
D040A			2.0	VDD	V	4.5V ≤ VDD ≤ 5.5V
D041		with Schmitt Trigger buffer	0.8VDD	VDD	V	
		RC3 and RC4	0.7VDD	VDD	V	
D042		$\overline{\text{MCLR}}$	0.8VDD	VDD	V	
D042A		OSC1 (in XT, HS and LP modes) and T1OSI	0.7VDD	VDD	V	
D043		OSC1 (RC mode)(1)	0.9VDD	VDD	V	
D050	VHYS	Hysteresis of Schmitt Trigger Inputs	TBD	TBD	V	
	IIL	**Input Leakage Current(2,3)**				
D060		I/O ports	—	±1	µA	VSS ≤ VPIN ≤ VDD, Pin at hi-impedance
D061		$\overline{\text{MCLR}}$	—	±5	µA	Vss ≤ VPIN ≤ VDD
D063		OSC1	—	±5	µA	Vss ≤ VPIN ≤ VDD
	IPU	**Weak Pull-up Current**				
D070	IPURB	PORTB weak pull-up current	50	400	µA	VDD = 5V, VPIN = VSS

Note 1: In RC oscillator configuration, the OSC1/CLKIN pin is a Schmitt Trigger input. It is not recommended that the PICmicro be driven with an external clock while in RC mode.

2: The leakage current on the $\overline{\text{MCLR}}$ pin is strongly dependent on the applied voltage level. The specified levels represent normal operating conditions. Higher leakage current may be measured at different input voltages.

3: Negative current is defined as current sourced by the pin.

21.3 DC Characteristics: PIC18CXX2 (Industrial, Extended) and PIC18LCXX2 (Industrial) (cont'd)

DC CHARACTERISTICS			Standard Operating Conditions (unless otherwise stated) Operating temperature -40°C ≤ TA ≤ +85°C for industrial -40°C ≤ TA ≤ +125°C for extended			
Param No.	**Symbol**	**Characteristic**	**Min**	**Max**	**Units**	**Conditions**
	VOL	**Output Low Voltage**				
D080		I/O ports	—	0.6	V	IOL = 8.5 mA, VDD = 4.5V, -40°C to +85°C
D080A			—	0.6	V	IOL = 7.0 mA, VDD = 4.5V, -40°C to +125°C
D083		OSC2/CLKOUT (RC mode)	—	0.6	V	IOL = 1.6 mA, VDD = 4.5V, -40°C to +85°C
D083A			—	0.6	V	IOL = 1.2 mA, VDD = 4.5V, -40°C to +125°C
	VOH	**Output High Voltage**(3)				
D090		I/O ports	VDD - 0.7	—	V	IOH = -3.0 mA, VDD = 4.5V, -40°C to +85°C
D090A			VDD - 0.7	—	V	IOH = -2.5 mA, VDD = 4.5V, -40°C to +125°C
D092		OSC2/CLKOUT (RC mode)	VDD - 0.7	—	V	IOH = -1.3 mA, VDD = 4.5V, -40°C to +85°C
D092A			VDD - 0.7	—	V	IOH = -1.0 mA, VDD = 4.5V, -40°C to +125°C
D150	VOD	**Open-drain High Voltage**	—	7.5	V	RA4 pin
		Capacitive Loading Specs on Output Pins				
D101	CIO	All I/O pins and OSC2 (in RC mode)	—	50	pF	To meet the AC Timing Specifications
D102	CB	SCL, SDA	—	400	pF	In I^2C mode

Note 1: In RC oscillator configuration, the OSC1/CLKIN pin is a Schmitt Trigger input. It is not recommended that the PICmicro be driven with an external clock while in RC mode.

2: The leakage current on the $\overline{MCLR}$ pin is strongly dependent on the applied voltage level. The specified levels represent normal operating conditions. Higher leakage current may be measured at different input voltages.

3: Negative current is defined as current sourced by the pin.

FIGURE 21-3: LOW-VOLTAGE DETECT CHARACTERISTICS

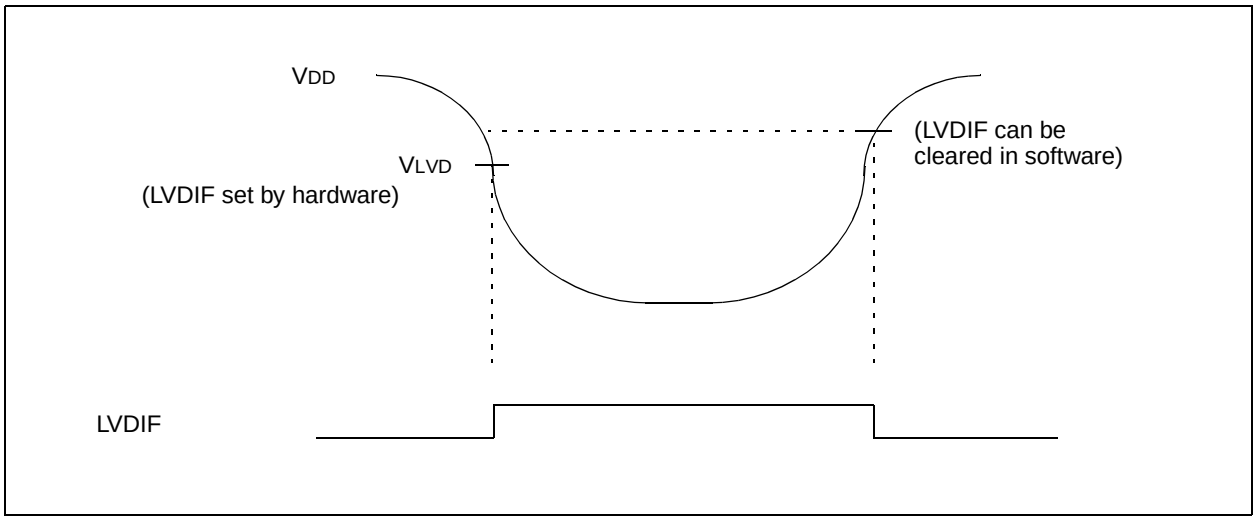

TABLE 21-1: LOW VOLTAGE DETECT CHARACTERISTICS

		Standard Operating Conditions (unless otherwise stated) Operating temperature -40°C ≤ TA ≤ +85°C for industrial -40°C ≤ TA ≤ +125°C for extended					
Param No.	**Symbol**	**Characteristic**		**Min**	**Max**	**Units**	**Conditions**
D420	VLVD	LVD Voltage	LVV<3:0> = 0100	2.5	2.66	V	
			LVV<3:0> = 0101	2.7	2.86	V	
			LVV<3:0> = 0110	2.8	2.98	V	
			LVV<3:0> = 0111	3.0	3.2	V	
			LVV<3:0> = 1000	3.3	3.52	V	
			LVV<3:0> = 1001	3.5	3.72	V	
			LVV<3:0> = 1010	3.6	3.84	V	
			LVV<3:0> = 1011	3.8	4.04	V	
			LVV<3:0> = 1100	4.0	4.26	V	
			LVV<3:0> = 1101	4.2	4.46	V	
			LVV<3:0> = 1110	4.5	4.78	V	

TABLE 21-2: EPROM PROGRAMMING REQUIREMENTS

DC CHARACTERISTICS			Standard Operating Conditions (unless otherwise stated) Operating temperature -40°C ≤ TA ≤ +40°C			
Param. No.	**Sym**	**Characteristic**	**Min**	**Max**	**Units**	**Conditions**
		Internal Program Memory Programming Specs (Note 1)				
D110	VPP	Voltage on $\overline{\text{MCLR}}$/VPP pin	12.75	13.25	V	Note 2
D111	VDDP	Supply voltage during programming	4.75	5.25	V	
D112	IPP	Current into $\overline{\text{MCLR}}$/VPP pin	—	50	mA	
D113	IDDP	Supply current during programming	—	30	mA	
D114	TPROG	Programming pulse width	100	1000	µs	Terminated via internal/external interrupt or a reset
D115	TERASE	EPROM erase time				
		Device operation ≤ 3V	4	—	hrs	
		Device operation ≥ 3V	TBD	—	hrs	

Note 1: These specifications are for the programming of the on-chip program memory EPROM through the use of the table write instructions. The complete programming specifications can be found in: PIC18CXXX Programming Specifications (Literature number TBD).

2: The $\overline{\text{MCLR}}$/VPP pin may be kept in this range at times other than programming, but is not recommended.

21.4 AC (Timing) Characteristics

21.4.1 TIMING PARAMETER SYMBOLOGY

The timing parameter symbols have been created following one of the following formats:

1. TppS2ppS
2. TppS
3. TCC:ST (I^{2}C specifications only)
4. Ts (I^{2}C specifications only)

T			
F	Frequency	T	Time

Lowercase letters (pp) and their meanings:

pp			
cc	CCP1	osc	OSC1
ck	CLKOUT	rd	$\overline{RD}$
cs	$\overline{CS}$	rw	$\overline{RD}$ or $\overline{WR}$
di	SDI	sc	SCK
do	SDO	ss	$\overline{SS}$
dt	Data in	t0	T0CKI
io	I/O port	t1	T1CKI
mc	$\overline{MCLR}$	wr	$\overline{WR}$

Uppercase letters and their meanings:

S			
F	Fall	P	Period
H	High	R	Rise
I	Invalid (Hi-impedance)	V	Valid
L	Low	Z	Hi-impedance
I^{2}C only			
AA	output access	High	High
BUF	Bus free	Low	Low

TCC:ST (I^{2}C specifications only)

CC			
HD	Hold	SU	Setup
ST			
DAT	DATA input hold	STO	STOP condition
STA	START condition		

21.4.2 TIMING CONDITIONS

The temperature and voltages specified in Table 21-3 apply to all timing specifications unless otherwise noted. Figure 21-4 specifies the load conditions for the timing specifications.

TABLE 21-3: TEMPERATURE AND VOLTAGE SPECIFICATIONS - AC

AC CHARACTERISTICS	**Standard Operating Conditions (unless otherwise stated)** Operating temperature -40°C ≤ TA ≤ +85°C for industrial -40°C ≤ TA ≤ +125°C for extended Operating voltage VDD range as described in DC spec Section 21.1 and Section 21.2. LC parts operate for industrial temp's only.

FIGURE 21-4: LOAD CONDITIONS FOR DEVICE TIMING SPECIFICATIONS

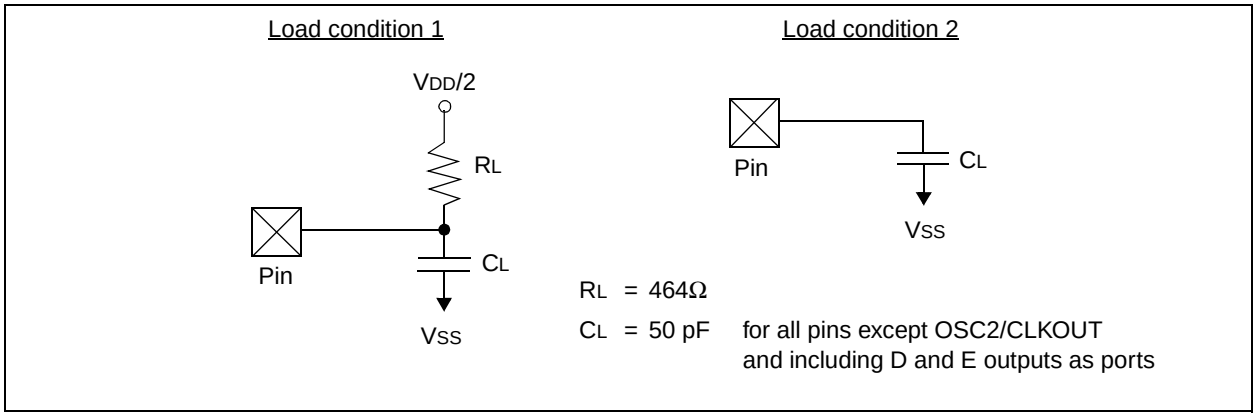

21.4.3 TIMING DIAGRAMS AND SPECIFICATIONS

FIGURE 21-5: EXTERNAL CLOCK TIMING

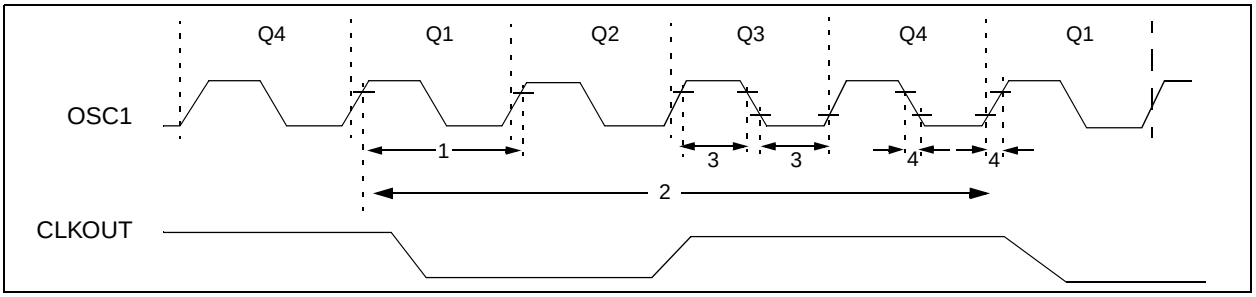

TABLE 21-4: EXTERNAL CLOCK TIMING REQUIREMENTS

Param. No.	Symbol	Characteristic	Min	Max	Units	Conditions
1A	Fosc	External CLKIN Frequency(1)	DC	40	MHz	XT 0osc
			DC	40	MHz	HS osc
			4	10	MHz	HS + PLL osc
			DC	40	kHz	LP osc
			DC	40	MHz	EC
		Oscillator Frequency(1)	DC	4	MHz	RC osc
			0.1	4	MHz	XT osc
			4	25	MHz	HS osc
			4	10	MHz	HS + PLL osc
			5	200	kHz	LP osc mode
1	Tosc	External CLKIN Period(1)	250	—	ns	XT and RC osc
			40	—	ns	HS osc
			100	—	ns	HS + PLL osc
			5	—	µs	LP osc
			5	—	ns	EC
		Oscillator Period(1)	250	—	ns	RC osc
			250	10,000	ns	XT osc
			100	10,000	ns	HS osc
			40	100	ns	HS + PLL osc
			5	—	µs	LP osc
2	TCY	Instruction Cycle Time(1)	100	—	ns	TCY = 4/FOSC
3	TosL, TosH	External Clock in (OSC1) High or Low Time	30	—	ns	XT osc
			2.5	—	µs	LP osc
			10	—	ns	HS osc
4	TosR, TosF	External Clock in (OSC1) Rise or Fall Time	—	20	ns	XT osc
			—	50	ns	LP osc
			—	7.5	ns	HS osc

Note 1: Instruction cycle period (TCY) equals four times the input oscillator time-base period. All specified values are based on characterization data for that particular oscillator type under standard operating conditions with the device executing code. Exceeding these specified limits may result in an unstable oscillator operation and/or higher than expected current consumption. All devices are tested to operate at "min." values with an external clock applied to the OSC1/CLKIN pin. When an external clock input is used, the "Max." cycle time limit is "DC" (no clock) for all devices.

TABLE 21-5: PLL CLOCK TIMING SPECIFICATION (V_{DD} = 4.2V - 5.5V)

Param No.	Symbol	Characteristic	Min	Max	Units	Conditions
	T_{RC}	PLL Start-up Time (Lock Time)	—	2	ms	
	Δ_{CLK}	CLKOUT Stability (Jitter) using PLL	-2	+2	%	

FIGURE 21-6: CLKOUT AND I/O TIMING

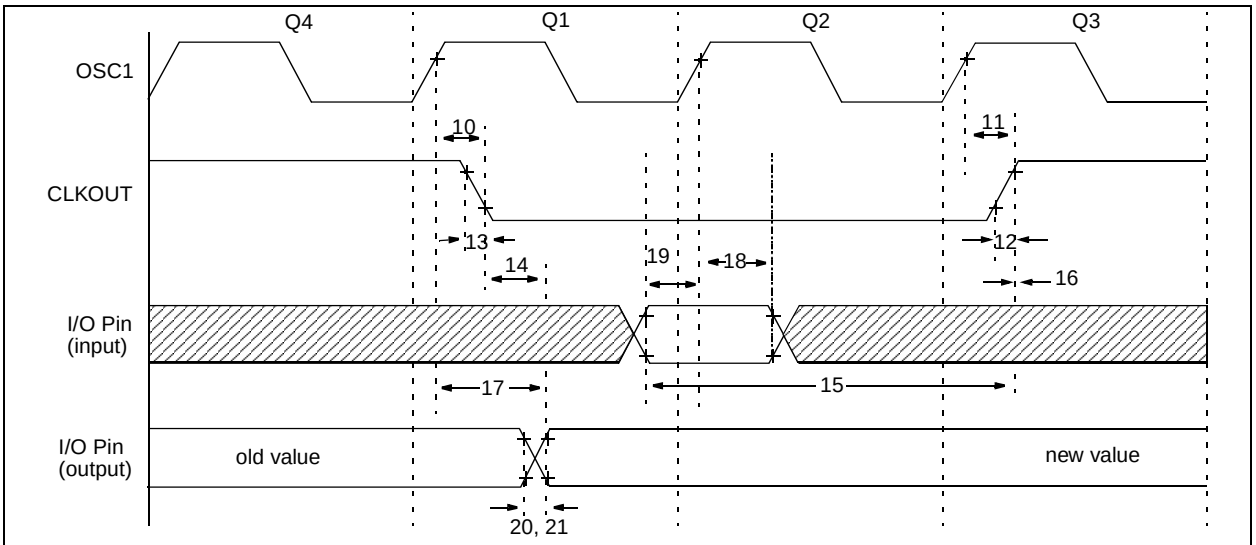

Note: Refer to Figure 21-4 for load conditions.

TABLE 21-6: CLKOUT AND I/O TIMING REQUIREMENTS

Param. No.	Symbol	Characteristic		Min	Typ	Max	Units	Conditions
10	TosH2ckL	OSC1↑ to CLKOUT↓		—	75	200	ns	(1)
11	TosH2ckH	OSC1↑ to CLKOUT↑		—	75	200	ns	(1)
12	TckR	CLKOUT rise time		—	35	100	ns	(1)
13	TckF	CLKOUT fall time		—	35	100	ns	(1)
14	TckL2ioV	CLKOUT ↓ to Port out valid		—	—	0.5TCY + 20	ns	(1)
15	TioV2ckH	Port in valid before CLKOUT ↑		0.25TCY + 25	—	—	ns	(1)
16	TckH2ioI	Port in hold after CLKOUT ↑		0	—	—	ns	(1)
17	TosH2ioV	OSC1↑ (Q1 cycle) to Port out valid		—	50	150	ns	
18	TosH2ioI	OSC1↑ (Q2 cycle) to Port input invalid (I/O in hold time)	PIC18**C**XXX	100	—	—	ns	
18A			PIC18**LC**XXX	200	—	—	ns	
19	TioV2osH	Port input valid to OSC1↑ (I/O in setup time)		0	—	—	ns	
20	TioR	Port output rise time	PIC18**C**XXX	—	10	25	ns	
20A			PIC18**LC**XXX	—	—	60	ns	
21	TioF	Port output fall time	PIC18**C**XXX	—	10	25	ns	
21A			PIC18**LC**XXX	—	—	60	ns	
22††	TINP	INT pin high or low time		TCY	—	—	ns	
23††	TRBP	RB7:RB4 change INT high or low time		TCY	—	—	ns	
24††	TRCP	RC7:RC4 change INT high or low time		20			ns	

†† These parameters are asynchronous events not related to any internal clock edges.

Note 1: Measurements are taken in RC Mode where CLKOUT output is 4 x TOSC.

FIGURE 21-7: RESET, WATCHDOG TIMER, OSCILLATOR START-UP TIMER AND POWER-UP TIMER TIMING

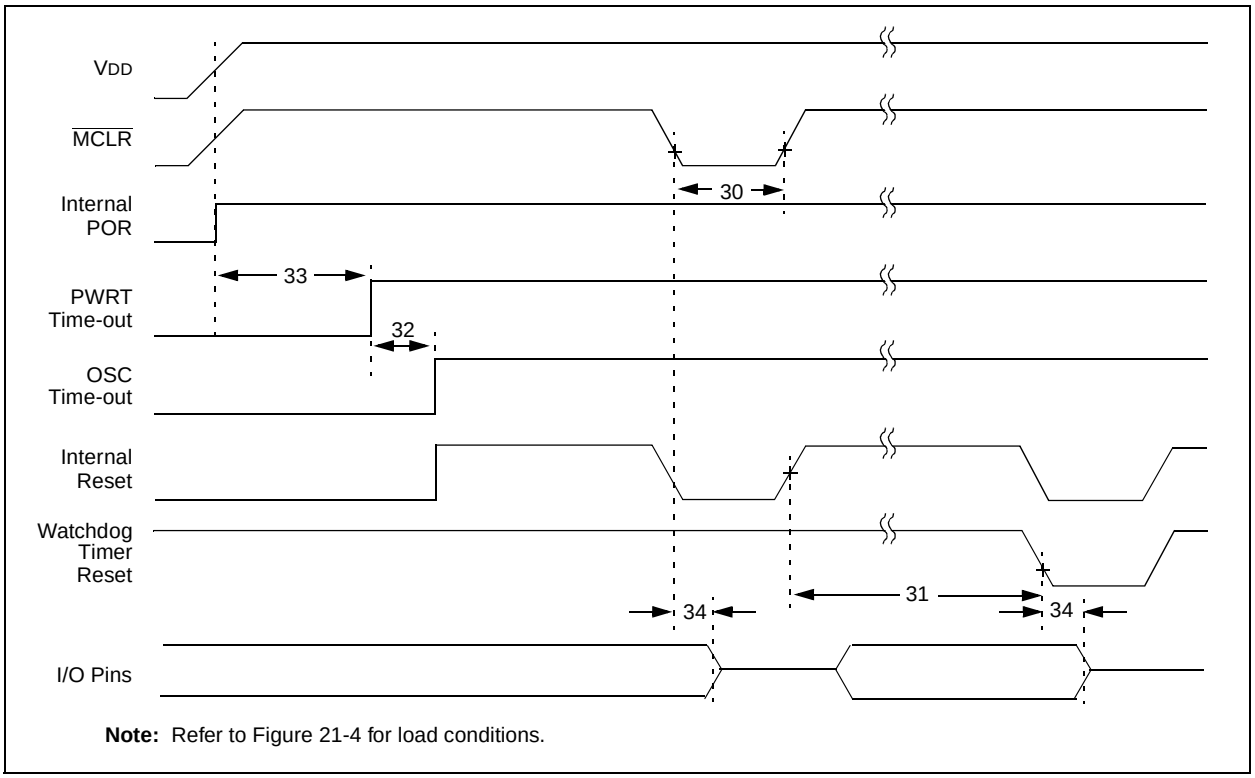

FIGURE 21-8: BROWN-OUT RESET TIMING

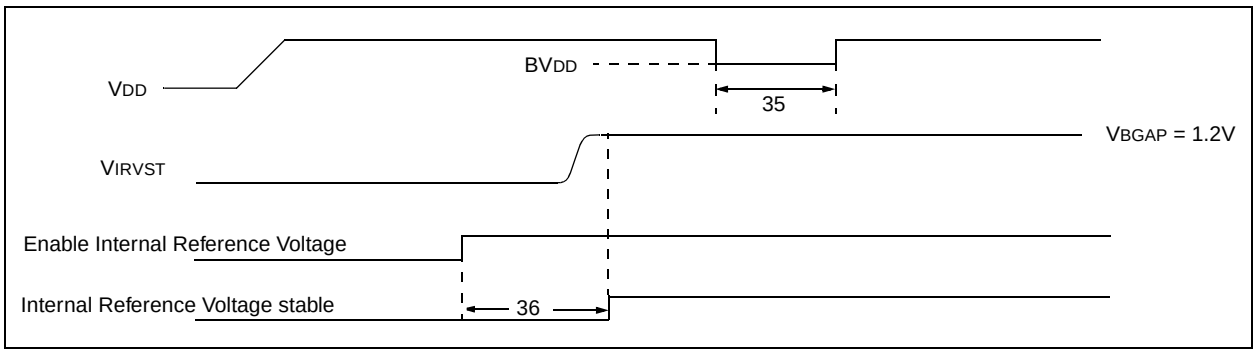

TABLE 21-7: RESET, WATCHDOG TIMER, OSCILLATOR START-UP TIMER, POWER-UP TIMER AND BROWN-OUT RESET REQUIREMENTS

Param. No.	Symbol	Characteristic	Min	Typ	Max	Units	Conditions
30	TmcL	$\overline{\text{MCLR}}$ Pulse Width (low)	2	—	—	µs	
31	TWDT	Watchdog Timer Time-out Period (No Prescaler)	7	18	33	ms	
32	TOST	Oscillation Start-up Timer Period	1024TOSC	—	1024TOSC	—	TOSC = OSC1 period
33	TPWRT	Power up Timer Period	28	72	132	ms	
34	TIOZ	I/O Hi-impedance from $\overline{\text{MCLR}}$ Low or Watchdog Timer Reset	—	2	—	µs	
35	TBOR	Brown-out Reset Pulse Width	200	—	—	µs	VDD ≤ BVDD (See D005)
36	TIVRST	Time for Internal Reference Voltage to become stable	—	20	50	µs	

FIGURE 21-9: TIMER0 AND TIMER1 EXTERNAL CLOCK TIMINGS

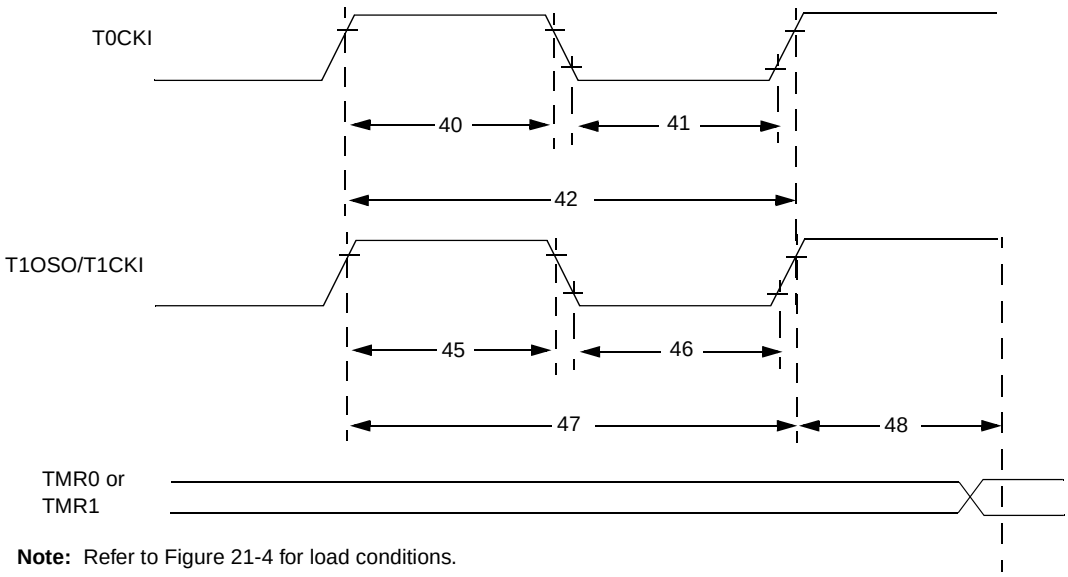

Note: Refer to Figure 21-4 for load conditions.

TABLE 21-8: TIMER0 AND TIMER1 EXTERNAL CLOCK REQUIREMENTS

Param No.	Symbol	Characteristic			Min	Max	Units	Conditions
40	Tt0H	T0CKI High Pulse Width		No Prescaler	0.5TCY + 20	—	ns	
				With Prescaler	10	—	ns	
41	Tt0L	T0CKI Low Pulse Width		No Prescaler	0.5TCY + 20	—	ns	
				With Prescaler	10	—	ns	
42	Tt0P	T0CKI Period		No Prescaler	TCY + 10	—	ns	
				With Prescaler	Greater of: 20 ns or $\frac{T_{CY} + 40}{N}$	—	ns	N = prescale value (1, 2, 4,..., 256)
45	Tt1H	T1CKI High Time	Synchronous, no prescaler		0.5TCY + 20	—	ns	
			Synchronous, with prescaler	PIC18**C**XXX	10	—	ns	
				PIC18**LC**XXX	25	—	ns	
			Asynchronous	PIC18**C**XXX	30	—	ns	
				PIC18**LC**XXX	50	—	ns	
46	Tt1L	T1CKI Low Time	Synchronous, no prescaler		0.5TCY + 5	—	ns	
			Synchronous, with prescaler	PIC18**C**XXX	10	—	ns	
				PIC18**LC**XXX	25	—	ns	
			Asynchronous	PIC18**C**XXX	30	—	ns	
				PIC18**LC**XXX	TBD	TBD	ns	
47	Tt1P	T1CKI input period	Synchronous		Greater of: 20 ns or $\frac{T_{CY} + 40}{N}$	—	ns	N = prescale value (1, 2, 4, 8)
			Asynchronous		60	—	ns	
	Ft1	T1CKI oscillator input frequency range			DC	50	kHz	
48	Tcke2tmrI	Delay from external T1CKI clock edge to timer increment			2Tosc	7Tosc	—	

FIGURE 21-10: CAPTURE/COMPARE/PWM TIMINGS (CCP1 AND CCP2)

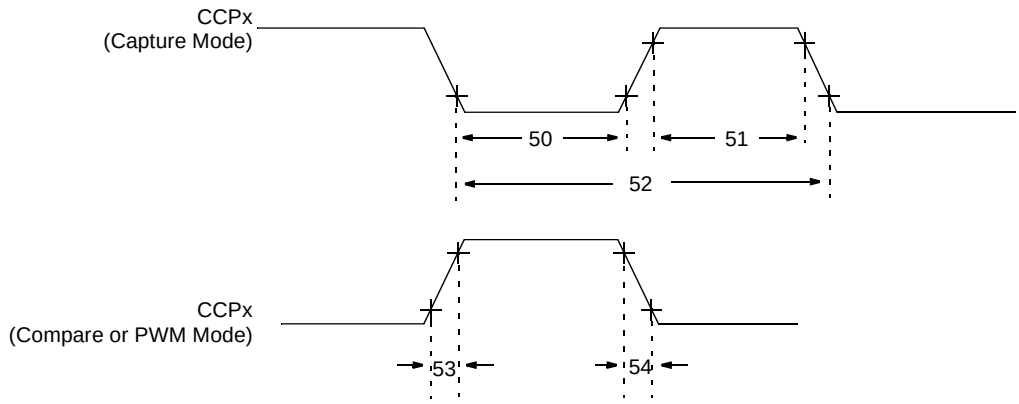

Note: Refer to Figure 21-4 for load conditions.

TABLE 21-9: CAPTURE/COMPARE/PWM REQUIREMENTS (CCP1 AND CCP2)

Param. No.	Symbol	Characteristic			Min	Max	Units	Conditions
50	TccL	CCPx input low time	No Prescaler		0.5TCY + 20	—	ns	
			With Prescaler	PIC18**C**XXX	10	—	ns	
				PIC18**LC**XXX	20	—	ns	
51	TccH	CCPx input high time	No Prescaler		0.5TCY + 20	—	ns	
			With Prescaler	PIC18**C**XXX	10	—	ns	
				PIC18**LC**XXX	20	—	ns	
52	TccP	CCPx input period			3TCY + 40 / N	—	ns	N = prescale value (1,4 or 16)
53	TccR	CCPx output fall time		PIC18**C**XXX	—	25	ns	
				PIC18**LC**XXX	—	45	ns	
54	TccF	CCPx output fall time		PIC18**C**XXX	—	25	ns	
				PIC18**LC**XXX	—	45	ns	

FIGURE 21-11: PARALLEL SLAVE PORT TIMING (PIC18C4X2)

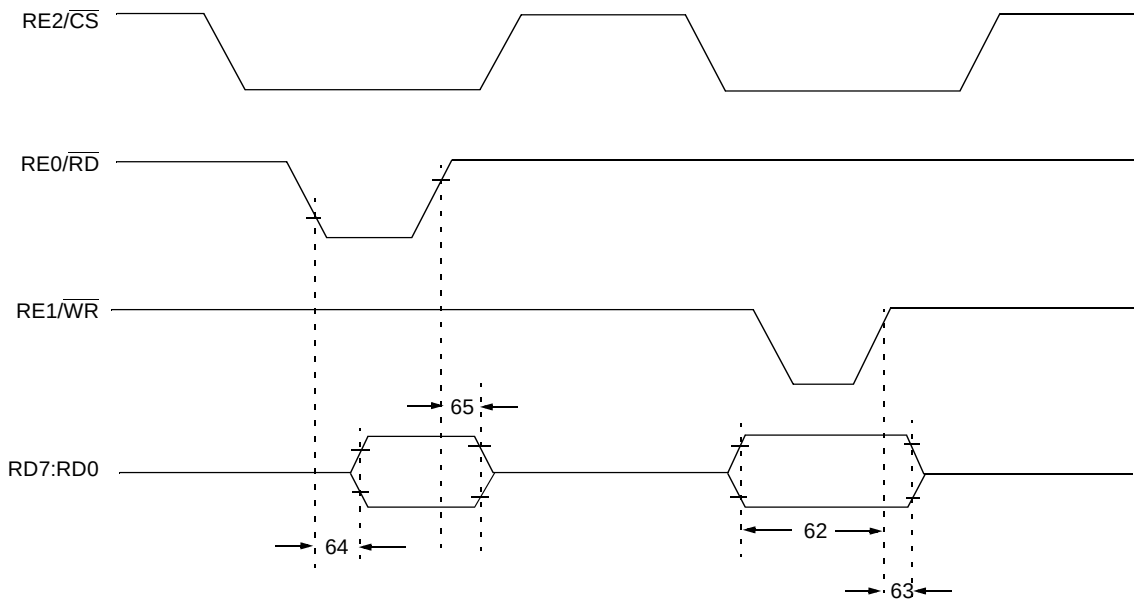

Note: Refer to Figure 21-4 for load conditions.

TABLE 21-10: PARALLEL SLAVE PORT REQUIREMENTS (PIC18C4X2)

Param. No.	Symbol	Characteristic		Min	Max	Units	Conditions
62	TdtV2wrH	Data in valid before $\overline{WR}$↑ or $\overline{CS}$↑ (setup time)		20 25	— —	ns ns	 Extended Temp range
63	TwrH2dtI	$\overline{WR}$↑ or $\overline{CS}$↑ to data–in invalid (hold time)	PIC18**C**XXX	20	—	ns	
			PIC18**LC**XXX	35	—	ns	
64	TrdL2dtV	$\overline{RD}$↓ and $\overline{CS}$↓ to data–out valid		— —	80 90	ns ns	 Extended Temp range
65	TrdH2dtI	$\overline{RD}$↑ or $\overline{CS}$↓ to data–out invalid		10	30	ns	
66	TibfINH	Inhibit of the IBF flag bit being cleared from $\overline{WR}$↑ or $\overline{CS}$↑		—	3TCY		

FIGURE 21-12: EXAMPLE SPI MASTER MODE TIMING (CKE = 0)

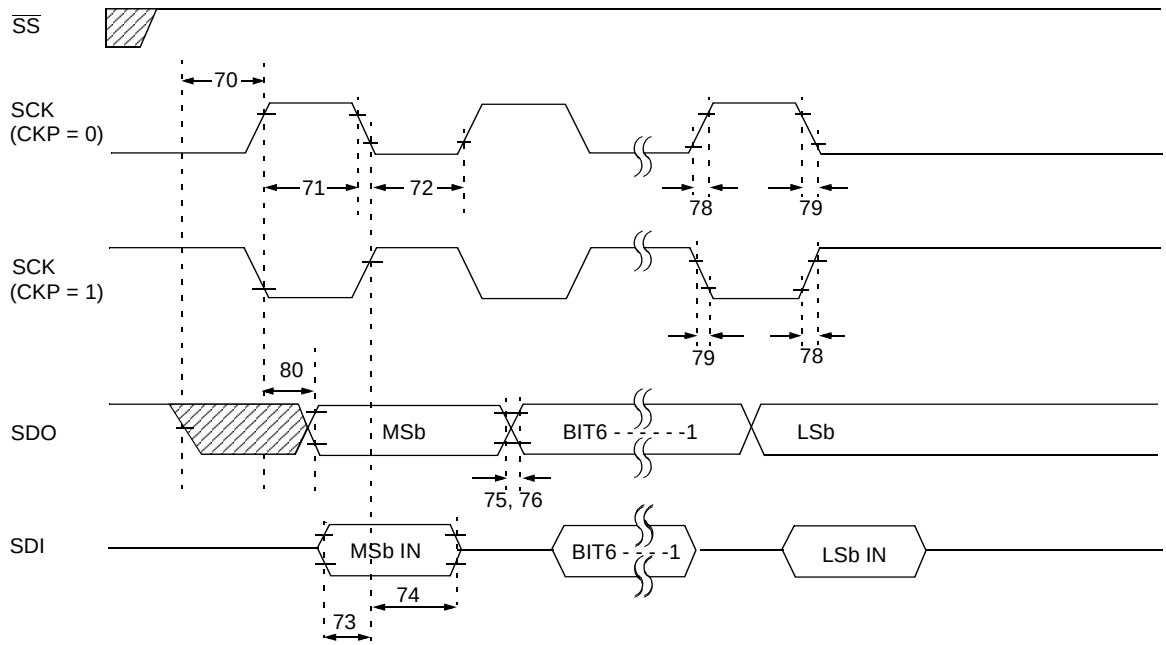

Note: Refer to Figure 21-4 for load conditions.

TABLE 21-11: EXAMPLE SPI MODE REQUIREMENTS (MASTER MODE, CKE = 0)

Param. No.	Symbol	Characteristic		Min	Max	Units	Conditions
70	TssL2scH, TssL2scL	$\overline{SS}$↓ to SCK↓ or SCK↑ input		TCY	—	ns	
71	TscH	SCK input high time (slave mode)	Continuous	1.25TCY + 30	—	ns	
71A			Single Byte	40	—	ns	Note 1
72	TscL	SCK input low time (slave mode)	Continuous	1.25TCY + 30	—	ns	
72A			Single Byte	40	—	ns	Note 1
73	TdiV2scH, TdiV2scL	Setup time of SDI data input to SCK edge		100	—	ns	
73A	TB2B	Last clock edge of Byte1 to the 1st clock edge of Byte2		1.5TCY + 40	—	ns	Note 2
74	TscH2diL, TscL2diL	Hold time of SDI data input to SCK edge		100	—	ns	
75	TdoR	SDO data output rise time	PIC18**C**XXX	—	25	ns	
			PIC18**LC**XXX	—	45	ns	
76	TdoF	SDO data output fall time		—	25	ns	
78	TscR	SCK output rise time (master mode)	PIC18**C**XXX	—	25	ns	
			PIC18**LC**XXX	—	45	ns	
79	TscF	SCK output fall time (master mode)		—	25	ns	
80	TscH2doV, TscL2doV	SDO data output valid after SCK edge	PIC18**C**XXX	—	50	ns	
			PIC18**LC**XXX	—	100	ns	

Note 1: Requires the use of Parameter # 73A.
2: Only if Parameter #s 71A and 72A are used.

FIGURE 21-13: EXAMPLE SPI MASTER MODE TIMING (CKE = 1)

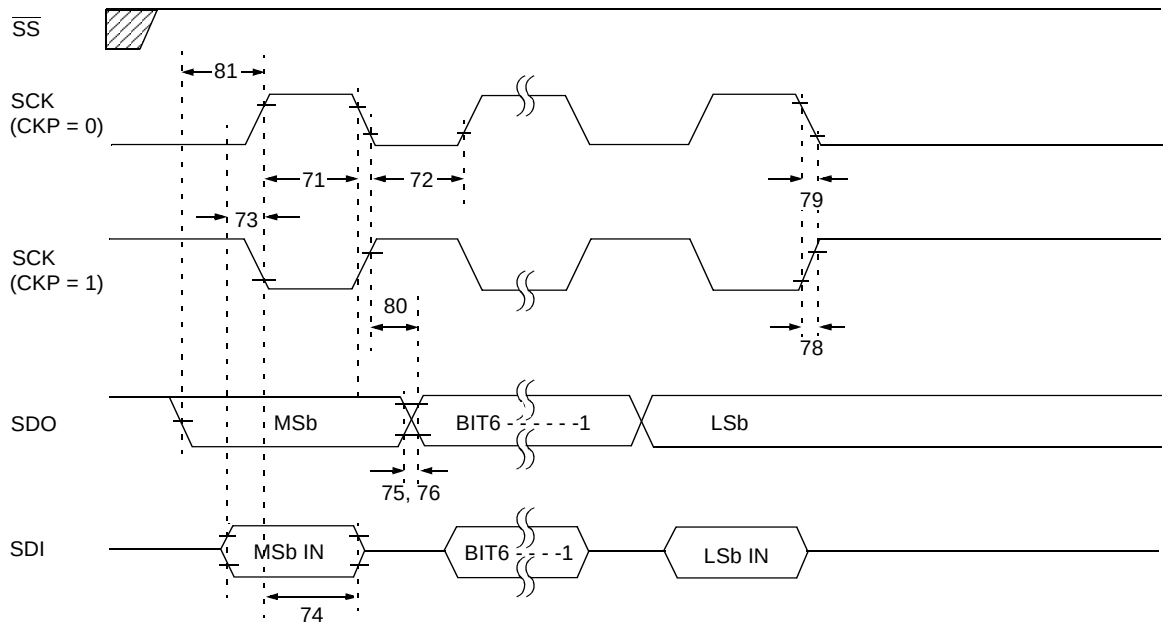

Note: Refer to Figure 21-4 for load conditions.

TABLE 21-12: EXAMPLE SPI MODE REQUIREMENTS (MASTER MODE, CKE = 1)

Param. No.	Symbol	Characteristic		Min	Max	Units	Conditions
71	TscH	SCK input high time (slave mode)	Continuous	1.25TCY + 30	—	ns	
71A			Single Byte	40	—	ns	Note 1
72	TscL	SCK input low time (slave mode)	Continuous	1.25TCY + 30	—	ns	
72A			Single Byte	40	—	ns	Note 1
73	TdiV2scH, TdiV2scL	Setup time of SDI data input to SCK edge		100	—	ns	
73A	TB2B	Last clock edge of Byte1 to the 1st clock edge of Byte2		1.5TCY + 40	—	ns	Note 2
74	TscH2diL, TscL2diL	Hold time of SDI data input to SCK edge		100	—	ns	
75	TdoR	SDO data output rise time	PIC18**C**XXX	—	25	ns	
			PIC18**LC**XXX		45	ns	
76	TdoF	SDO data output fall time		—	25	ns	
78	TscR	SCK output rise time (master mode)	PIC18**C**XXX	—	25	ns	
			PIC18**LC**XXX		45	ns	
79	TscF	SCK output fall time (master mode)		—	25	ns	
80	TscH2doV, TscL2doV	SDO data output valid after SCK edge	PIC18**C**XXX	—	50	ns	
			PIC18**LC**XXX		100	ns	
81	TdoV2scH, TdoV2scL	SDO data output setup to SCK edge		TCY	—	ns	

Note 1: Requires the use of Parameter # 73A.
2: Only if Parameter #s 71A and 72A are used.

FIGURE 21-14: EXAMPLE SPI SLAVE MODE TIMING (CKE = 0)

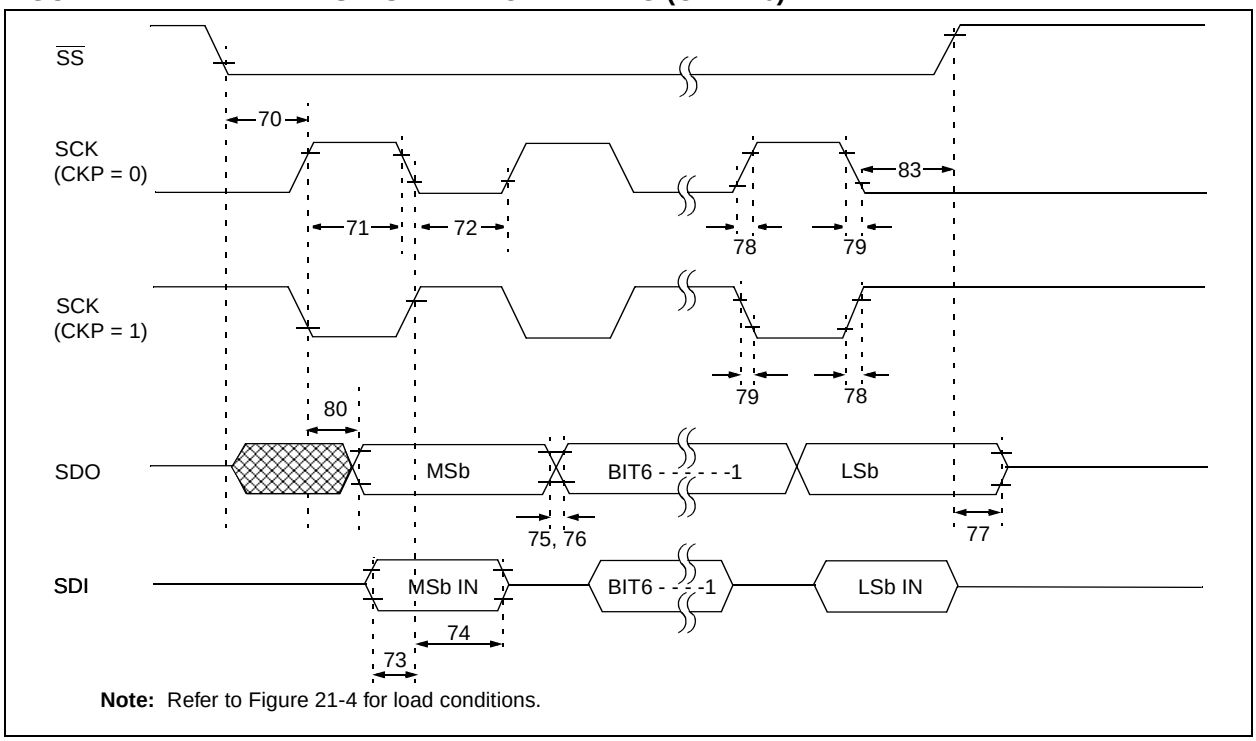

Note: Refer to Figure 21-4 for load conditions.

TABLE 21-13: EXAMPLE SPI MODE REQUIREMENTS (SLAVE MODE TIMING (CKE = 0))

Parm. No.	Symbol	Characteristic		Min	Max	Units	Conditions
70	TssL2scH, TssL2scL	$\overline{SS}$↓ to SCK↓ or SCK↑ input		TCY	—	ns	
71	TscH	SCK input high time (slave mode)	Continuous	1.25TCY + 30	—	ns	
71A			Single Byte	40	—	ns	Note 1
72	TscL	SCK input low time (slave mode)	Continuous	1.25TCY + 30	—	ns	
72A			Single Byte	40	—	ns	Note 1
73	TdiV2scH, TdiV2scL	Setup time of SDI data input to SCK edge		100	—	ns	
73A	TB2B	Last clock edge of Byte1 to the 1st clock edge of Byte2		1.5TCY + 40	—	ns	Note 2
74	TscH2diL, TscL2diL	Hold time of SDI data input to SCK edge		100	—	ns	
75	TdoR	SDO data output rise time	PIC18**C**XXX	—	25	ns	
			PIC18**LC**XXX		45	ns	
76	TdoF	SDO data output fall time		—	25	ns	
77	TssH2doZ	$\overline{SS}$↑ to SDO output hi-impedance		10	50	ns	
78	TscR	SCK output rise time (master mode)	PIC18**C**XXX	—	25	ns	
			PIC18**LC**XXX		45	ns	
79	TscF	SCK output fall time (master mode)		—	25	ns	
80	TscH2doV, TscL2doV	SDO data output valid after SCK edge	PIC18**C**XXX	—	50	ns	
			PIC18**LC**XXX		100	ns	
83	TscH2ssH, TscL2ssH	$\overline{SS}$ ↑ after SCK edge		1.5TCY + 40	—	ns	

Note 1: Requires the use of Parameter # 73A.
2: Only if Parameter #s 71A and 72A are used.

FIGURE 21-15: EXAMPLE SPI SLAVE MODE TIMING (CKE = 1)

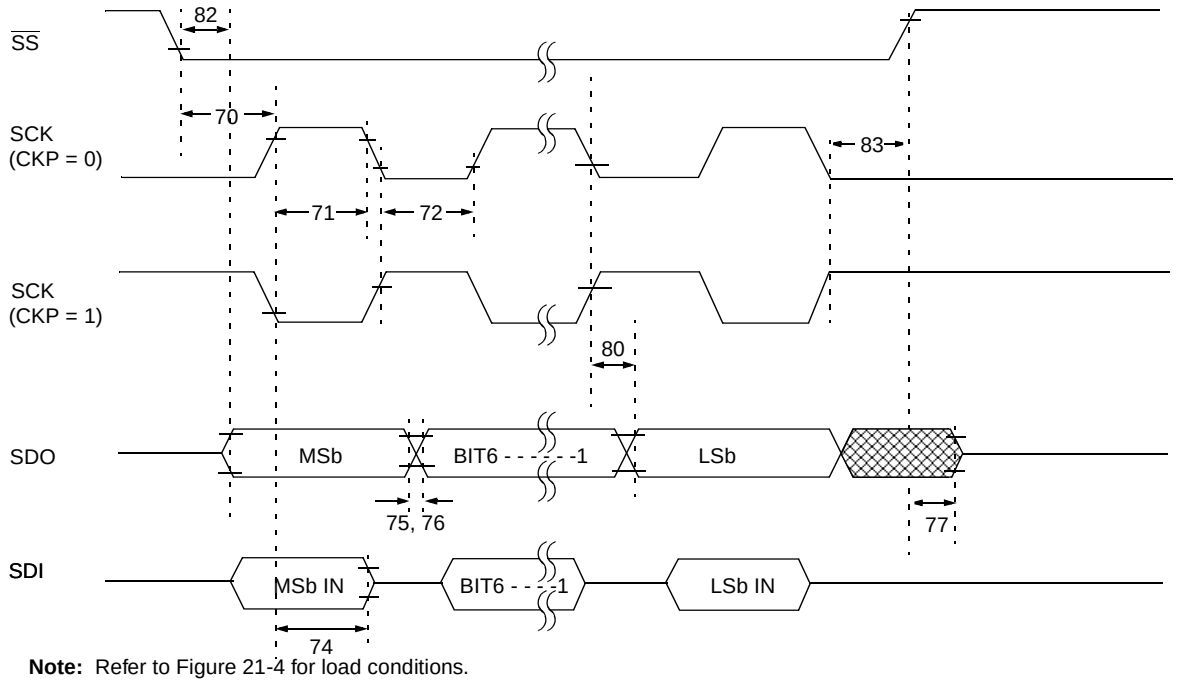

Note: Refer to Figure 21-4 for load conditions.

TABLE 21-14: EXAMPLE SPI SLAVE MODE REQUIREMENTS (CKE = 1)

Parm. No.	Symbol	Characteristic		Min	Max	Units	Conditions
70	TssL2scH, TssL2scL	$\overline{SS}$↓ to SCK↓ or SCK↑ input		TCY	—	ns	
71	TscH	SCK input high time (slave mode)	Continuous	1.25TCY + 30	—	ns	
71A			Single Byte	40	—	ns	Note 1
72	TscL	SCK input low time (slave mode)	Continuous	1.25TCY + 30	—	ns	
72A			Single Byte	40	—	ns	Note 1
73A	TB2B	Last clock edge of Byte1 to the 1st clock edge of Byte2		1.5TCY + 40	—	ns	Note 2
74	TscH2diL, TscL2diL	Hold time of SDI data input to SCK edge		100	—	ns	
75	TdoR	SDO data output rise time	PIC18**C**XXX	—	25	ns	
			PIC18**LC**XXX		45	ns	
76	TdoF	SDO data output fall time		—	25	ns	
77	TssH2doZ	$\overline{SS}$↑ to SDO output hi-impedance		10	50	ns	
78	TscR	SCK output rise time (master mode)	PIC18**C**XXX	—	25	ns	
			PIC18**LC**XXX	—	45	ns	
79	TscF	SCK output fall time (master mode)		—	25	ns	
80	TscH2doV, TscL2doV	SDO data output valid after SCK edge	PIC18**C**XXX	—	50	ns	
			PIC18**LC**XXX	—	100	ns	
82	TssL2doV	SDO data output valid after $\overline{SS}$↓ edge	PIC18**C**XXX	—	50	ns	
			PIC18**LC**XXX	—	100	ns	
83	TscH2ssH, TscL2ssH	$\overline{SS}$ ↑ after SCK edge		1.5TCY + 40	—	ns	

Note 1: Requires the use of Parameter # 73A.
2: Only if Parameter #s 71A and 72A are used.

FIGURE 21-16: I²C BUS START/STOP BITS TIMING

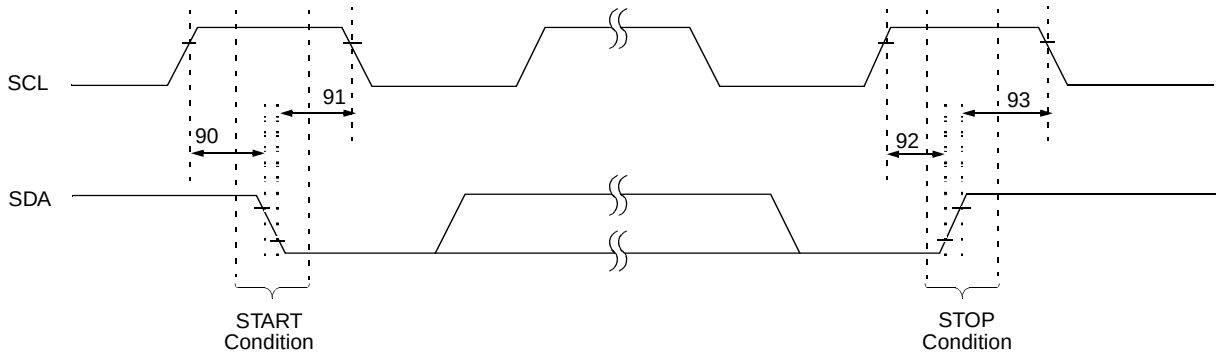

Note: Refer to Figure 21-4 for load conditions.

TABLE 21-15: I²C BUS START/STOP BITS REQUIREMENTS (SLAVE MODE)

Parm. No.	Symbol	Characteristic		Min	Max	Units	Conditions
90	TSU:STA	START condition Setup time	100 kHz mode	4700	—	ns	Only relevant for repeated START condition
			400 kHz mode	600	—		
91	THD:STA	START condition Hold time	100 kHz mode	4000	—	ns	After this period the first clock pulse is generated
			400 kHz mode	600	—		
92	TSU:STO	STOP condition Setup time	100 kHz mode	4700	—	ns	
			400 kHz mode	600	—		
93	THD:STO	STOP condition Hold time	100 kHz mode	4000	—	ns	
			400 kHz mode	600	—		

FIGURE 21-17: I²C BUS DATA TIMING

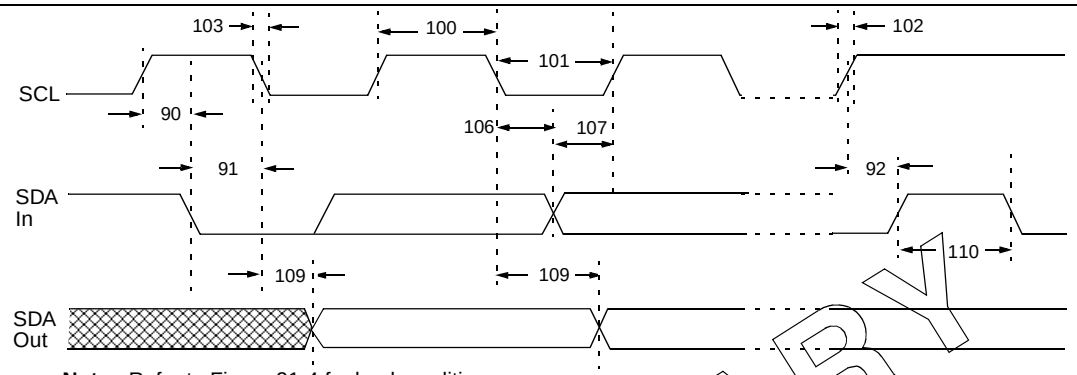

Note: Refer to Figure 21-4 for load conditions.

TABLE 21-16: I²C BUS DATA REQUIREMENTS (SLAVE MODE)

Param. No.	Symbol	Characteristic		Min	Max	Units	Conditions
100	THIGH	Clock high time	100 kHz mode	4.0	—	µs	PIC18CXXX must operate at a minimum of 1.5 MHz
			400 kHz mode	0.6	—	µs	PIC18CXXX must operate at a minimum of 10 MHz
			SSP Module	1.5TCY	—		
101	TLOW	Clock low time	100 kHz mode	4.7	—	µs	PIC18CXXX must operate at a minimum of 1.5 MHz
			400 kHz mode	1.3	—	µs	PIC18CXXX must operate at a minimum of 10 MHz
			SSP Module	1.5TCY	—		
102	TR	SDA and SCL rise time	100 kHz mode	—	1000	ns	
			400 kHz mode	20 + 0.1Cb	300	ns	Cb is specified to be from 10 to 400 pF
103	TF	SDA and SCL fall time	100 kHz mode	—	300	ns	
			400 kHz mode	20 + 0.1Cb	300	ns	Cb is specified to be from 10 to 400 pF
90	TSU:STA	START condition setup time	100 kHz mode	4.7	—	µs	Only relevant for repeated START condition
			400 kHz mode	0.6	—	µs	
91	THD:STA	START condition hold time	100 kHz mode	4.0	—	µs	After this period the first clock pulse is generated
			400 kHz mode	0.6	—	µs	
106	THD:DAT	Data input hold time	100 kHz mode	0	—	ns	
			400 kHz mode	0	0.9	µs	
107	TSU:DAT	Data input setup time	100 kHz mode	250	—	ns	Note 2
			400 kHz mode	100	—	ns	
92	TSU:STO	STOP condition setup time	100 kHz mode	4.7	—	µs	
			400 kHz mode	0.6	—	µs	
109	TAA	Output valid from clock	100 kHz mode	—	3500	ns	Note 1
			400 kHz mode	—	—	ns	
110	TBUF	Bus free time	100 kHz mode	4.7	—	µs	Time the bus must be free before a new transmission can start
			400 kHz mode	1.3	—	µs	
D102	Cb	Bus capacitive loading		—	400	pF	

Note 1: As a transmitter, the device must provide this internal minimum delay time to bridge the undefined region (min. 300 ns) of the falling edge of SCL to avoid unintended generation of START or STOP conditions.

2: A fast-mode I²C bus device can be used in a standard-mode I²C bus system, but the requirement tsu;DAT ≥ 250 ns must then be met. This will automatically be the case if the device does not stretch the LOW period of the SCL signal. If such a device does stretch the LOW period of the SCL signal, it must output the next data bit to the SDA line.
TR max. + tsu;DAT = 1000 + 250 = 1250 ns (according to the standard-mode I²C bus specification) before the SCL line is released.

FIGURE 21-18: MASTER SSP I²C BUS START/STOP BITS TIMING WAVEFORMS

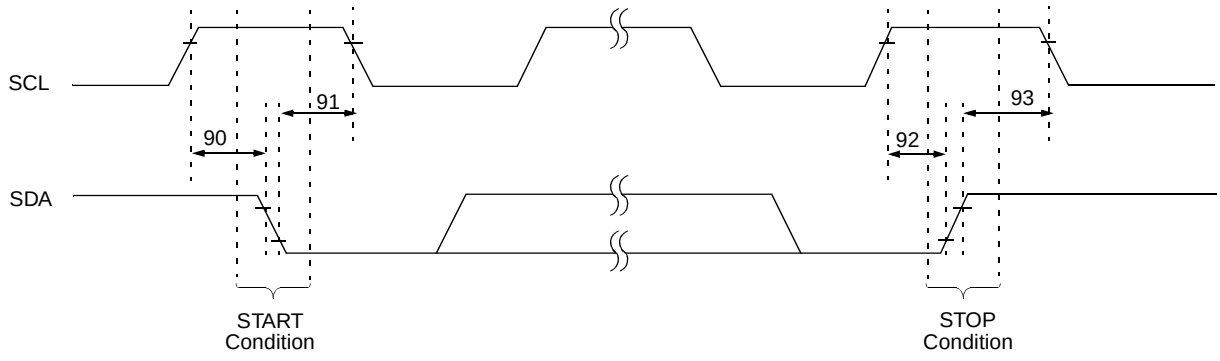

Note: Refer to Figure 21-4 for load conditions.

TABLE 21-17: MASTER SSP I²C BUS START/STOP BITS REQUIREMENTS

Param. No.	Symbol	Characteristic		Min	Max	Units	Conditions
90	TSU:STA	START condition Setup time	100 kHz mode	2(TOSC)(BRG + 1)	—	ns	Only relevant for repeated START condition
			400 kHz mode	2(TOSC)(BRG + 1)	—		
			1 MHz mode (1)	2(TOSC)(BRG + 1)	—		
91	THD:STA	START condition Hold time	100 kHz mode	2(TOSC)(BRG + 1)	—	ns	After this period the first clock pulse is generated
			400 kHz mode	2(TOSC)(BRG + 1)	—		
			1 MHz mode (1)	2(TOSC)(BRG + 1)	—		
92	TSU:STO	STOP condition Setup time	100 kHz mode	2(TOSC)(BRG + 1)	—	ns	
			400 kHz mode	2(TOSC)(BRG + 1)	—		
			1 MHz mode (1)	2(TOSC)(BRG + 1)	—		
93	THD:STO	STOP condition Hold time	100 kHz mode	2(TOSC)(BRG + 1)	—	ns	
			400 kHz mode	2(TOSC)(BRG + 1)	—		
			1 MHz mode (1)	2(TOSC)(BRG + 1)	—		

Note 1: Maximum pin capacitance = 10 pF for all I²C pins.

FIGURE 21-19: MASTER SSP I²C BUS DATA TIMING

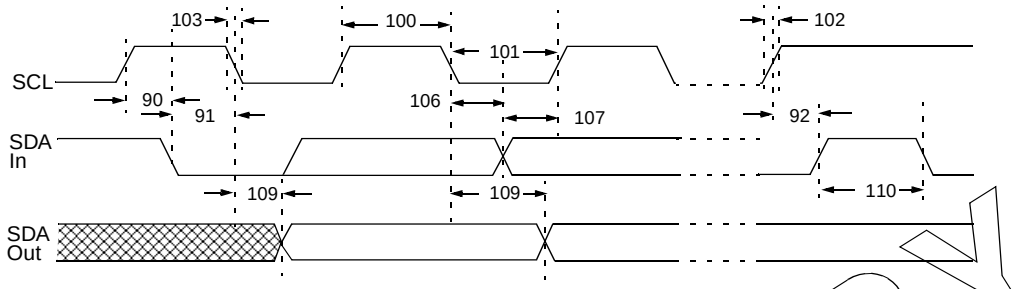

Note: Refer to Figure 21-4 for load conditions.

TABLE 21-18: MASTER SSP I²C BUS DATA REQUIREMENTS

Param. No.	Symbol	Characteristic		Min	Max	Units	Conditions
100	THIGH	Clock high time	100 kHz mode	2(TOSC)(BRG + 1)	—	ms	
			400 kHz mode	2(TOSC)(BRG + 1)	—	ms	
			1 MHz mode (1)	2(TOSC)(BRG + 1)	—	ms	
101	TLOW	Clock low time	100 kHz mode	2(TOSC)(BRG + 1)	—	ms	
			400 kHz mode	2(TOSC)(BRG + 1)	—	ms	
			1 MHz mode (1)	2(TOSC)(BRG + 1)	—	ms	
102	TR	SDA and SCL rise time	100 kHz mode	—	1000	ns	Cb is specified to be from 10 to 400 pF
			400 kHz mode	20 + 0.1Cb	300	ns	
			1 MHz mode (1)	—	300	ns	
103	TF	SDA and SCL fall time	100 kHz mode	—	300	ns	Cb is specified to be from 10 to 400 pF
			400 kHz mode	20 + 0.1Cb	300	ns	
			1 MHz mode (1)	—	100	ns	
90	TSU:STA	START condition setup time	100 kHz mode	2(TOSC)(BRG + 1)	—	ms	Only relevant for repeated START condition
			400 kHz mode	2(TOSC)(BRG + 1)	—	ms	
			1 MHz mode (1)	2(TOSC)(BRG + 1)	—	ms	
91	THD:STA	START condition hold time	100 kHz mode	2(TOSC)(BRG + 1)	—	ms	After this period the first clock pulse is generated
			400 kHz mode	2(TOSC)(BRG + 1)	—	ms	
			1 MHz mode (1)	2(TOSC)(BRG + 1)	—	ms	
106	THD:DAT	Data input hold time	100 kHz mode	0	—	ns	
			400 kHz mode	0	0.9	ms	
			1 MHz mode (1)	TBD	—	ns	
107	TSU:DAT	Data input setup time	100 kHz mode	250	—	ns	Note 2
			400 kHz mode	100	—	ns	
			1 MHz mode (1)	TBD	—	ns	
92	TSU:STO	STOP condition setup time	100 kHz mode	2(TOSC)(BRG + 1)	—	ms	
			400 kHz mode	2(TOSC)(BRG + 1)	—	ms	
			1 MHz mode (1)	2(TOSC)(BRG + 1)	—	ms	
109	TAA	Output valid from clock	100 kHz mode	—	3500	ns	
			400 kHz mode	—	1000	ns	
			1 MHz mode (1)	—	—	ns	
110	TBUF	Bus free time	100 kHz mode	4.7	—	ms	Time the bus must be free before a new transmission can start
			400 kHz mode	1.3	—	ms	
			1 MHz mode (1)	TBD	—	ms	
D102	Cb	Bus capacitive loading		—	400	pF	

Note 1: Maximum pin capacitance = 10 pF for all I²C pins.

2: A fast-mode I²C bus device can be used in a standard-mode I²C bus system, but parameter #107 ≥ 250 ns must then be met. This will automatically be the case if the device does not stretch the LOW period of the SCL signal. If such a device does stretch the LOW period of the SCL signal, it must output the next data bit to the SDA line. parameter #102.+ parameter #107 = 1000 + 250 = 1250 ns (for 100 kHz-mode) before the SCL line is released.

FIGURE 21-20: USART SYNCHRONOUS TRANSMISSION (MASTER/SLAVE) TIMING

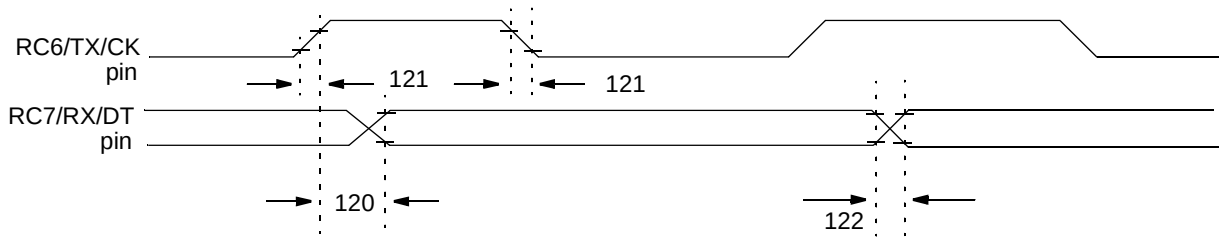

Note: Refer to Figure 21-4 for load conditions.

TABLE 21-19: USART SYNCHRONOUS TRANSMISSION REQUIREMENTS

Param. No.	Symbol	Characteristic		Min	Max	Units	Conditions
120	TckH2dtV	SYNC XMIT (MASTER & SLAVE) Clock high to data out valid	PIC18**C**XXX	—	40	ns	
			PIC18**LC**XXX	—	100	ns	
121	Tckrf	Clock out rise time and fall time (Master Mode)	PIC18**C**XXX	—	20	ns	
			PIC18**LC**XXX	—	50	ns	
122	Tdtrf	Data out rise time and fall time	PIC18**C**XXX	—	20	ns	
			PIC18**LC**XXX	—	50	ns	

FIGURE 21-21: USART SYNCHRONOUS RECEIVE (MASTER/SLAVE) TIMING

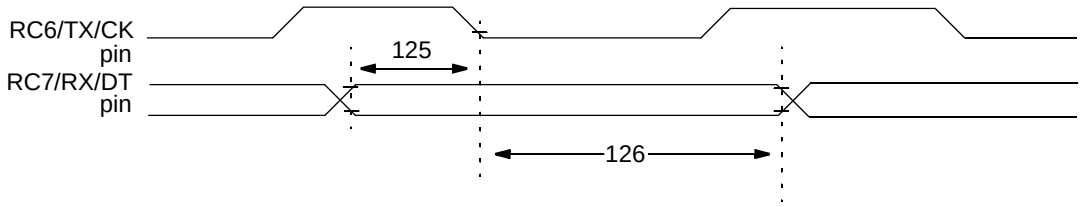

Note: Refer to Figure 21-4 for load conditions.

TABLE 21-20: USART SYNCHRONOUS RECEIVE REQUIREMENTS

Param. No.	Symbol	Characteristic	Min	Max	Units	Conditions
125	TdtV2ckl	SYNC RCV (MASTER & SLAVE) Data hold before CK ↓ (DT hold time)	10	—	ns	
126	TckL2dtl	Data hold after CK ↓ (DT hold time)	15	—	ns	

TABLE 21-21: A/D CONVERTER CHARACTERISTICS: PIC18CXX2 (INDUSTRIAL, EXTENDED) PIC18LCXX2 (INDUSTRIAL)

Param No.	Symbol	Characteristic	Min	Typ	Max	Units	Conditions
A01	N_R	Resolution	— —	— —	10 TBD	bit bit	$V_{REF} = V_{DD} \geq 3.0V$ $V_{REF} = V_{DD} < 3.0V$
A03	E_{IL}	Integral linearity error	— —	— —	<±1 TBD	LSb LSb	$V_{REF} = V_{DD} \geq 3.0V$ $V_{REF} = V_{DD} < 3.0V$
A04	E_{DL}	Differential linearity error	— —	— —	<±1 TBD	LSb LSb	$V_{REF} = V_{DD} \geq 3.0V$ $V_{REF} = V_{DD} < 3.0V$
A05	E_{FS}	Full scale error	— —	— —	<±1 TBD	LSb LSb	$V_{REF} = V_{DD} \geq 3.0V$ $V_{REF} = V_{DD} < 3.0V$
A06	E_{OFF}	Offset error	— —	— —	<±1 TBD	LSb LSb	$V_{REF} = V_{DD} \geq 3.0V$ $V_{REF} = V_{DD} < 3.0V$
A10	—	Monotonicity	guaranteed(3)			—	$V_{SS} \leq V_{AIN} \leq V_{REF}$
A20 A20A	V_{REF}	Reference voltage (V_{REFH} - V_{REFL})	0V 3V	— —	— —	V V	 For 10-bit resolution
A21	V_{REFH}	Reference voltage High	AV_{SS}	—	AV_{DD} + 0.3V	V	
A22	V_{REFL}	Reference voltage Low	AV_{SS} - 0.3V	—	AV_{DD}	V	
A25	V_{AIN}	Analog input voltage	AV_{SS} - 0.3V	—	V_{REF} + 0.3V	V	
A30	Z_{AIN}	Recommended impedance of analog voltage source	—		10.0	kΩ	
A40	I_{AD}	A/D conversion current (V_{DD}) PIC18**C**XXX	—	180	—	μA	Average current consumption when A/D is on. (Note 1)
		A/D conversion current (V_{DD}) PIC18**LC**XXX	—	90	—	μA	
A50	I_{REF}	V_{REF} input current (Note 2)	10 —	— —	1000 10	μA μA	During V_{AIN} acquisition. Based on differential of V_{HOLD} to V_{AIN}. To charge C_{HOLD} see Section 16.0. During A/D conversion cycle

Note 1: When A/D is off, it will not consume any current other than minor leakage current. The power-down current spec includes any such leakage from the A/D module.
V_{REF} current is from RA2/AN2/V_{REF}- and RA3/AN3/V_{REF}+ pins or AV_{DD} and AV_{SS} pins, whichever is selected as reference input.

2: $V_{SS} \leq V_{AIN} \leq V_{REF}$

3: The A/D conversion result either increases or remains constant as the analog input increases.

FIGURE 21-22: A/D CONVERSION TIMING

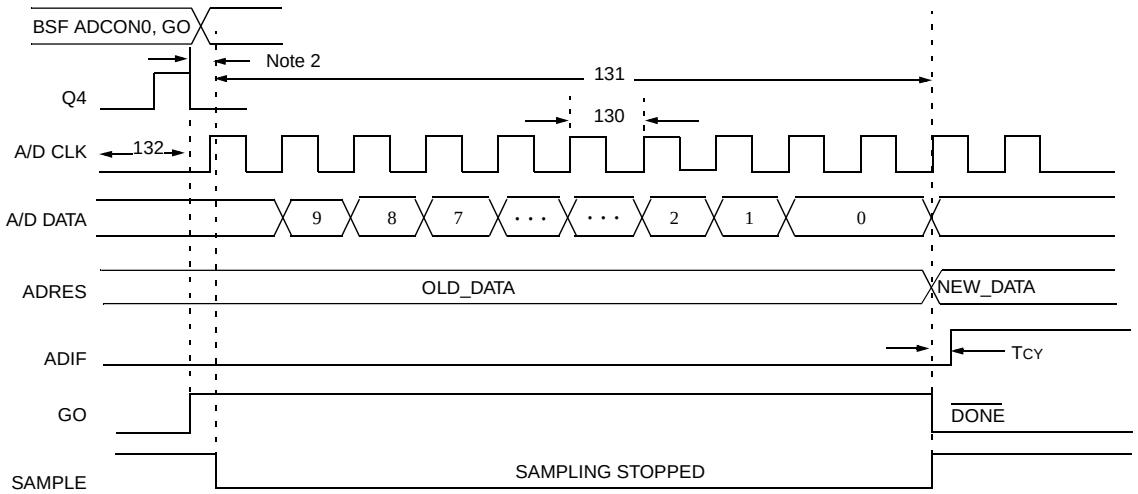

Note 1: If the A/D clock source is selected as RC, a time of TCY is added before the A/D clock starts. This allows the SLEEP instruction to be executed.

2: This is a minimal RC delay (typically 100 nS), which also disconnects the holding capacitor from the analog input.

TABLE 21-22: A/D CONVERSION REQUIREMENTS

Param No.	Symbol	Characteristic		Min	Max	Units	Conditions
130	TAD	A/D clock period	PIC18**C**XXX	1.6	20 (5)	µs	TOSC based, VREF ≥ 3.0V
			PIC18**LC**XXX	3.0	20 (5)	µs	TOSC based, VREF full range
			PIC18**C**XXX	2.0	6.0	µs	A/D RC Mode
			PIC18**LC**XXX	3.0	9.0	µs	A/D RC Mode
131	TCNV	Conversion time (not including acquisition time) (Note 1)		11	12	TAD	
132	TACQ	Acquisition time (Note 3)		15 10	— —	µs µs	-40°C ≤ Temp ≤ 125°C 0°C ≤ Temp ≤ 125°C
135	TSWC	Switching Time from convert → sample		—	Note 4		
136	TAMP	Amplifier settling time (Note 2)		1	—	µs	This may be used if the "new" input voltage has not changed by more than 1LSb (i.e. 5 mV @ 5.12V) from the last sampled voltage (as stated on CHOLD).

Note 1: ADRES register may be read on the following TCY cycle.

2: See the Section 16.0 for minimum conditions, when input voltage has changed more than 1 LSb.

3: The time for the holding capacitor to acquire the "New" input voltage, when the voltage changes full scale after the conversion (AVDD to AVSS, or AVSS to AVDD). The source impedance (*RS*) on the input channels is 50 Ω.

4: On the next Q4 cycle of the device clock.

5: The time of the A/D clock period is dependent on the device frequency and the TAD clock divider.

NOTES:

22.0 DC AND AC CHARACTERISTICS GRAPHS AND TABLES

Graphs and Tables not available at this time.

NOTES:

23.0 PACKAGING INFORMATION

23.1 Package Marking Information

Not available at time of printing. Will be made available after definition of QS9000 compliant standard

23.2 Package Details

The following sections give the technical details of the packages.

Package Type: 28-Lead Skinny Plastic Dual In-line (SP) – 300 mil

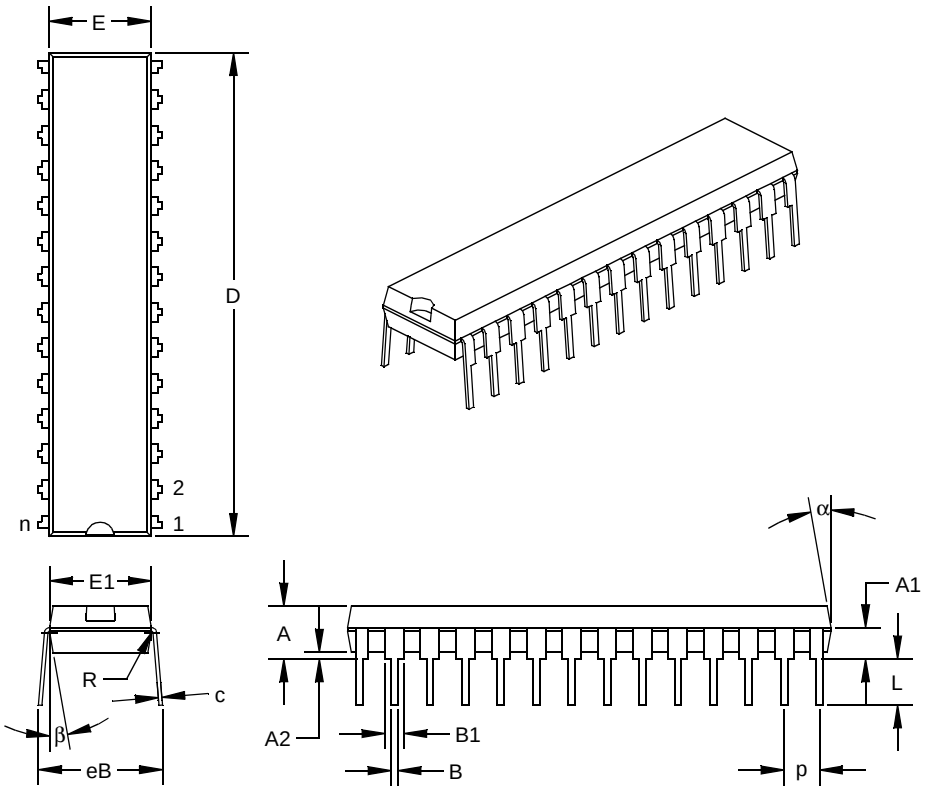

Units		INCHES*			MILLIMETERS		
Dimension Limits		MIN	NOM	MAX	MIN	NOM	MAX
PCB Row Spacing			0.300			7.62	
Number of Pins	n		28			28	
Pitch	p		0.100			2.54	
Lower Lead Width	B	0.016	0.019	0.022	0.41	0.48	0.56
Upper Lead Width	B1†	0.040	0.053	0.065	1.02	1.33	1.65
Shoulder Radius	R	0.000	0.005	0.010	0.00	0.13	0.25
Lead Thickness	c	0.008	0.010	0.012	0.20	0.25	0.30
Top to Seating Plane	A	0.140	0.150	0.160	3.56	3.81	4.06
Top of Lead to Seating Plane	A1	0.070	0.090	0.110	1.78	2.29	2.79
Base to Seating Plane	A2	0.015	0.020	0.025	0.38	0.51	0.64
Tip to Seating Plane	L	0.125	0.130	0.135	3.18	3.30	3.43
Package Length	D‡	1.345	1.365	1.385	34.16	34.67	35.18
Molded Package Width	E‡	0.280	0.288	0.295	7.11	7.30	7.49
Radius to Radius Width	E1	0.270	0.283	0.295	6.86	7.18	7.49
Overall Row Spacing	eB	0.320	0.350	0.380	8.13	8.89	9.65
Mold Draft Angle Top	α	5	10	15	5	10	15
Mold Draft Angle Bottom	β	5	10	15	5	10	15

* Controlling Parameter.

† Dimension “B1” does not include dam-bar protrusions. Dam-bar protrusions shall not exceed 0.003” (0.076 mm) per side or 0.006” (0.152 mm) more than dimension “B1.”

‡ Dimensions “D” and “E” do not include mold flash or protrusions. Mold flash or protrusions shall not exceed 0.010” (0.254 mm) per side or 0.020” (0.508 mm) more than dimensions “D” or “E.”

JEDEC equivalent: MO-095 AH

Package Type: 28-Lead Ceramic Dual In-line with Window (JW) – 600 mil

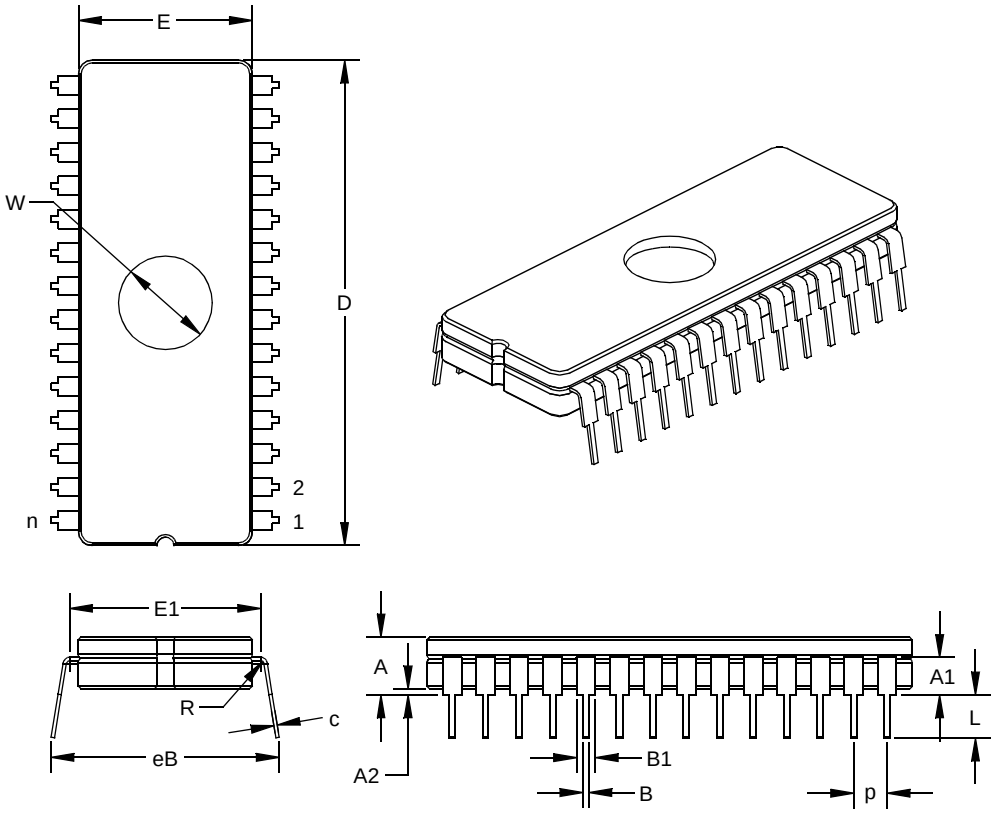

Units		INCHES*			MILLIMETERS		
Dimension Limits		MIN	NOM	MAX	MIN	NOM	MAX
PCB Row Spacing			0.600			15.24	
Number of Pins	n		28			28	
Pitch	p	0.098	0.100	0.102	2.49	2.54	2.59
Lower Lead Width	B	0.016	0.019	0.021	0.41	0.47	0.53
Upper Lead Width	B1	0.050	0.058	0.065	1.27	1.46	1.65
Shoulder Radius	R	0.000	0.005	0.010	0.00	0.13	0.25
Lead Thickness	c	0.008	0.010	0.012	0.20	0.25	0.30
Top to Seating Plane	A	0.170	0.185	0.200	4.32	4.70	5.08
Top of Lead to Seating Plane	A1	0.110	0.128	0.146	2.78	3.24	3.70
Base to Seating Plane	A2	0.015	0.035	0.055	0.38	0.89	1.40
Tip to Seating Plane	L	0.125	0.138	0.150	3.18	3.49	3.81
Package Length	D	1.430	1.460	1.490	36.32	37.08	37.85
Package Width	E	0.514	0.520	0.526	13.06	13.21	13.36
Radius to Radius Width	E1	0.560	0.580	0.600	14.22	14.73	15.24
Overall Row Spacing	eB	0.610	0.660	0.710	15.49	16.76	18.03
Window Diameter	W	0.270	0.280	0.290	6.86	7.11	7.37

* Controlling Parameter.

JEDEC equivalent: MO-103 AB

Package Type: 28-Lead Plastic Small Outline (SO) – Wide, 300 mil

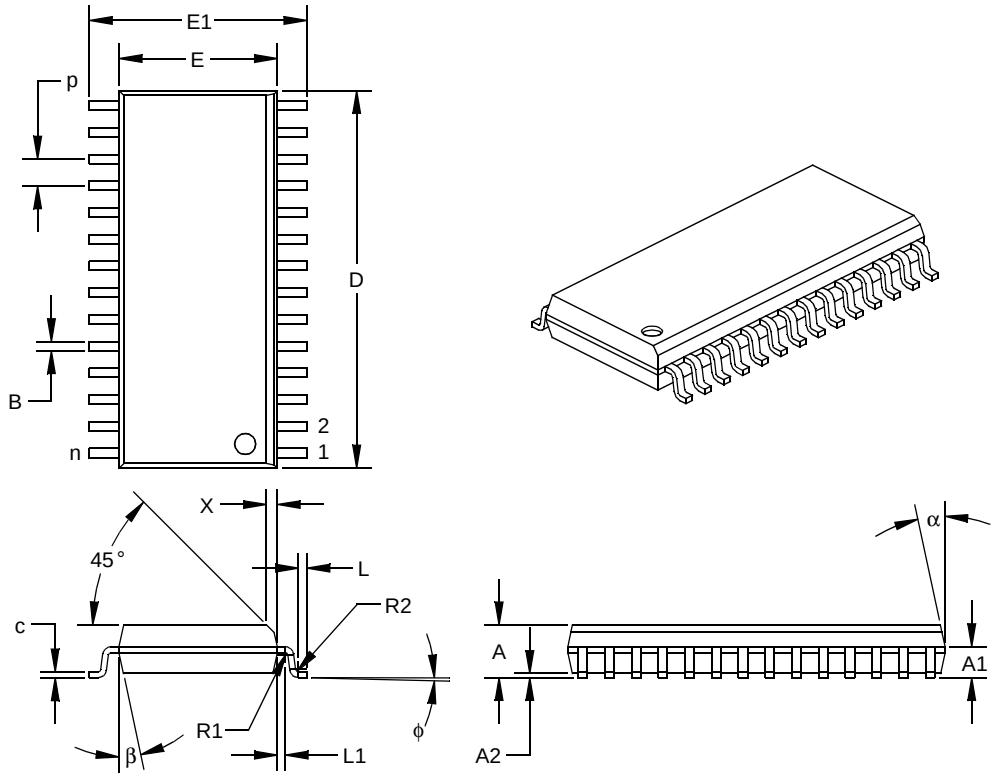

Units		INCHES*			MILLIMETERS		
Dimension Limits		MIN	NOM	MAX	MIN	NOM	MAX
Pitch	p		0.050			1.27	
Number of Pins	n		28			28	
Overall Pack. Height	A	0.093	0.099	0.104	2.36	2.50	2.64
Shoulder Height	A1	0.048	0.058	0.068	1.22	1.47	1.73
Standoff	A2	0.004	0.008	0.011	0.10	0.19	0.28
Molded Package Length	D‡	0.700	0.706	0.712	17.78	17.93	18.08
Molded Package Width	E‡	0.292	0.296	0.299	7.42	7.51	7.59
Outside Dimension	E1	0.394	0.407	0.419	10.01	10.33	10.64
Chamfer Distance	X	0.010	0.020	0.029	0.25	0.50	0.74
Shoulder Radius	R1	0.005	0.005	0.010	0.13	0.13	0.25
Gull Wing Radius	R2	0.005	0.005	0.010	0.13	0.13	0.25
Foot Length	L	0.011	0.016	0.021	0.28	0.41	0.53
Foot Angle	ϕ	0	4	8	0	4	8
Radius Centerline	L1	0.010	0.015	0.020	0.25	0.38	0.51
Lead Thickness	c	0.009	0.011	0.012	0.23	0.27	0.30
Lower Lead Width	B†	0.014	0.017	0.019	0.36	0.42	0.48
Mold Draft Angle Top	α	0	12	15	0	12	15
Mold Draft Angle Bottom	β	0	12	15	0	12	15

* Controlling Parameter.

† Dimension “B” does not include dam-bar protrusions. Dam-bar protrusions shall not exceed 0.003” (0.076 mm) per side or 0.006” (0.152 mm) more than dimension “B.”

‡ Dimensions “D” and “E” do not include mold flash or protrusions. Mold flash or protrusions shall not exceed 0.010” (0.254 mm) per side or 0.020” (0.508 mm) more than dimensions “D” or “E.”

JEDEC equivalent: MS-013 AE

Package Type: 40-Lead Plastic Dual In-line (P) – 600 mil

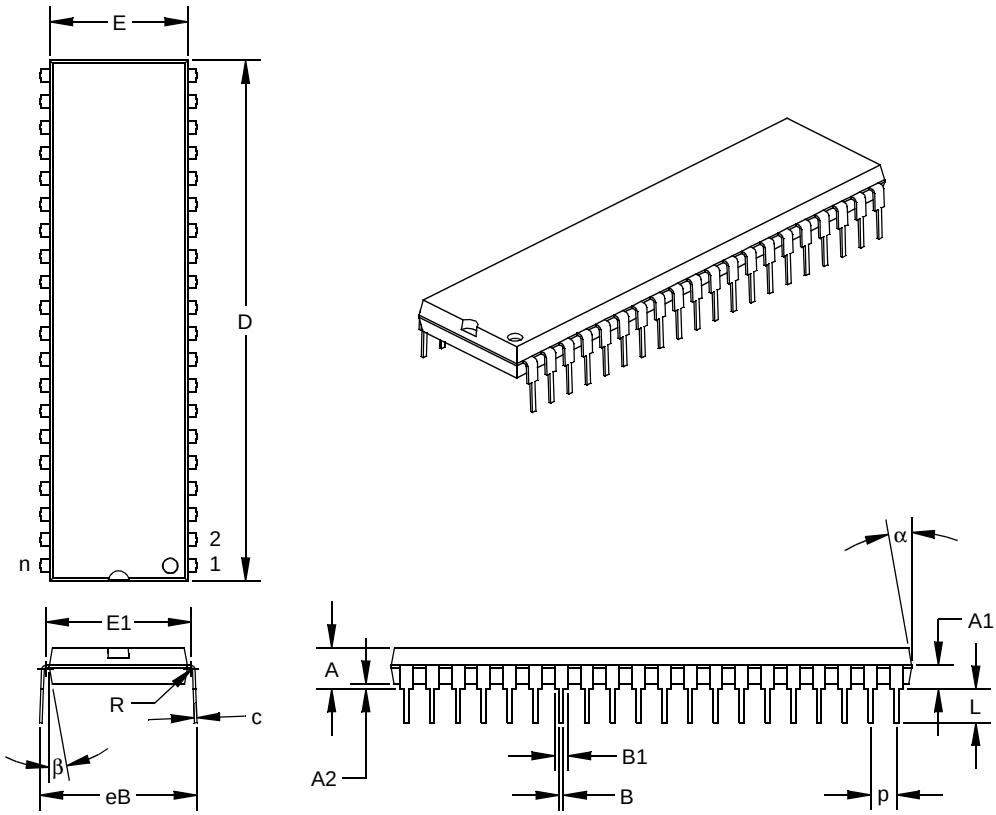

Units		INCHES*			MILLIMETERS		
Dimension Limits		MIN	NOM	MAX	MIN	NOM	MAX
PCB Row Spacing			0.600			15.24	
Number of Pins	n		40			40	
Pitch	p		0.100			2.54	
Lower Lead Width	B	0.016	0.018	0.020	0.41	0.46	0.51
Upper Lead Width	B1†	0.045	0.050	0.055	1.14	1.27	1.40
Shoulder Radius	R	0.000	0.005	0.010	0.00	0.13	0.25
Lead Thickness	c	0.009	0.010	0.011	0.23	0.25	0.28
Top to Seating Plane	A	0.110	0.160	0.160	2.79	4.06	4.06
Top of Lead to Seating Plane	A1	0.073	0.093	0.113	1.85	2.36	2.87
Base to Seating Plane	A2	0.020	0.020	0.040	0.51	0.51	1.02
Tip to Seating Plane	L	0.125	0.130	0.135	3.18	3.30	3.43
Package Length	D‡	2.013	2.018	2.023	51.13	51.26	51.38
Molded Package Width	E‡	0.530	0.535	0.540	13.46	13.59	13.72
Radius to Radius Width	E1	0.545	0.565	0.585	13.84	14.35	14.86
Overall Row Spacing	eB	0.630	0.610	0.670	16.00	15.49	17.02
Mold Draft Angle Top	α	5	10	15	5	10	15
Mold Draft Angle Bottom	β	5	10	15	5	10	15

* Controlling Parameter.

† Dimension “B1” does not include dam-bar protrusions. Dam-bar protrusions shall not exceed 0.003” (0.076 mm) per side or 0.006” (0.152 mm) more than dimension “B1.”

‡ Dimensions “D” and “E” do not include mold flash or protrusions. Mold flash or protrusions shall not exceed 0.010” (0.254 mm) per side or 0.020” (0.508 mm) more than dimensions “D” or “E.”

JEDEC equivalent: MS-011 AC

Package Type: 40-Lead Ceramic Dual In-line with Window (JW) – 600 mil

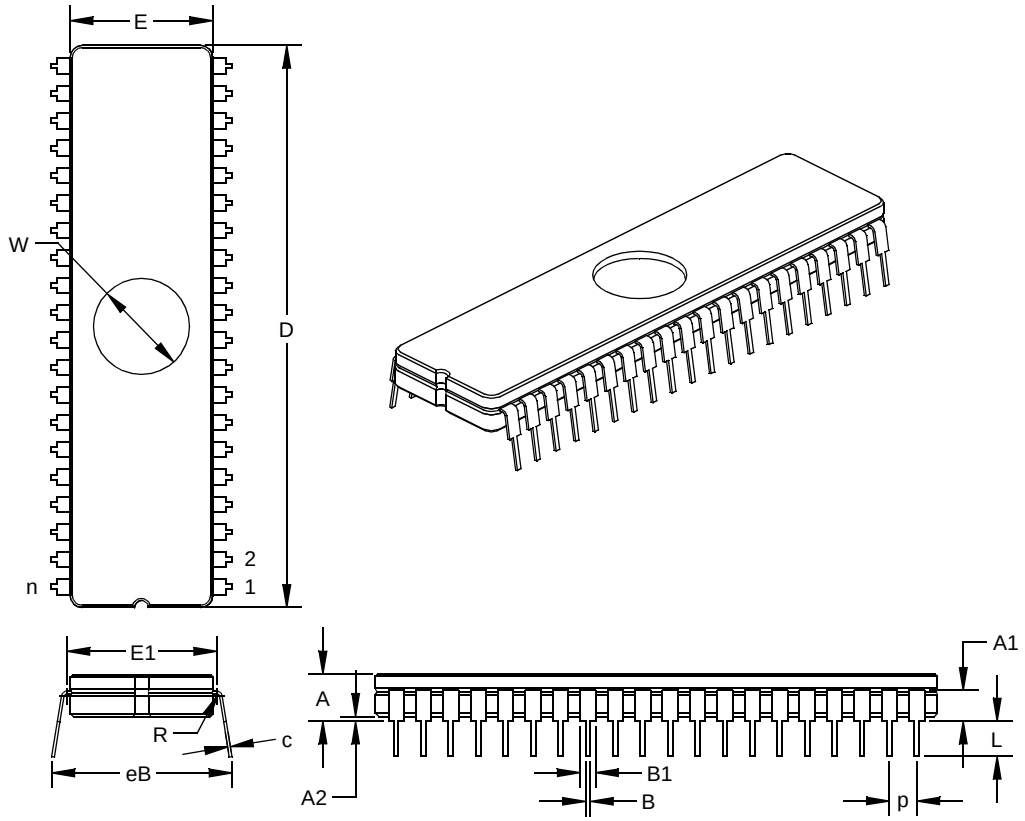

Units		INCHES*			MILLIMETERS		
Dimension Limits		MIN	NOM	MAX	MIN	NOM	MAX
PCB Row Spacing			0.600			15.24	
Number of Pins	n		40			40	
Pitch	p	0.098	0.100	0.102	2.49	2.54	2.59
Lower Lead Width	B	0.016	0.020	0.023	0.41	0.50	0.58
Upper Lead Width	B1	0.050	0.053	0.055	1.27	1.33	1.40
Shoulder Radius	R	0.000	0.005	0.010	0.00	0.13	0.25
Lead Thickness	c	0.008	0.011	0.014	0.20	0.28	0.36
Top to Seating Plane	A	0.190	0.205	0.220	4.83	5.21	5.59
Top of Lead to Seating Plane	A1	0.117	0.135	0.153	2.97	3.43	3.89
Base to Seating Plane	A2	0.015	0.035	0.055	0.38	0.89	1.40
Tip to Seating Plane	L	0.135	0.140	0.145	3.43	3.56	3.68
Package Length	D	2.040	2.050	2.060	51.82	52.07	52.32
Package Width	E	0.514	0.520	0.526	13.06	13.21	13.36
Radius to Radius Width	E1	0.560	0.580	0.600	14.22	14.73	15.24
Overall Row Spacing	eB	0.610	0.660	0.710	15.49	16.76	18.03
Window Diameter	W	0.340	0.350	0.360	8.64	8.89	9.14

* Controlling Parameter.
JEDEC equivalent: MO-103 AC

Package Type: 44-Lead Plastic Thin Quad Flatpack (PT)
10x10x1 mm Body, 1.0/0.1 mm Lead Form

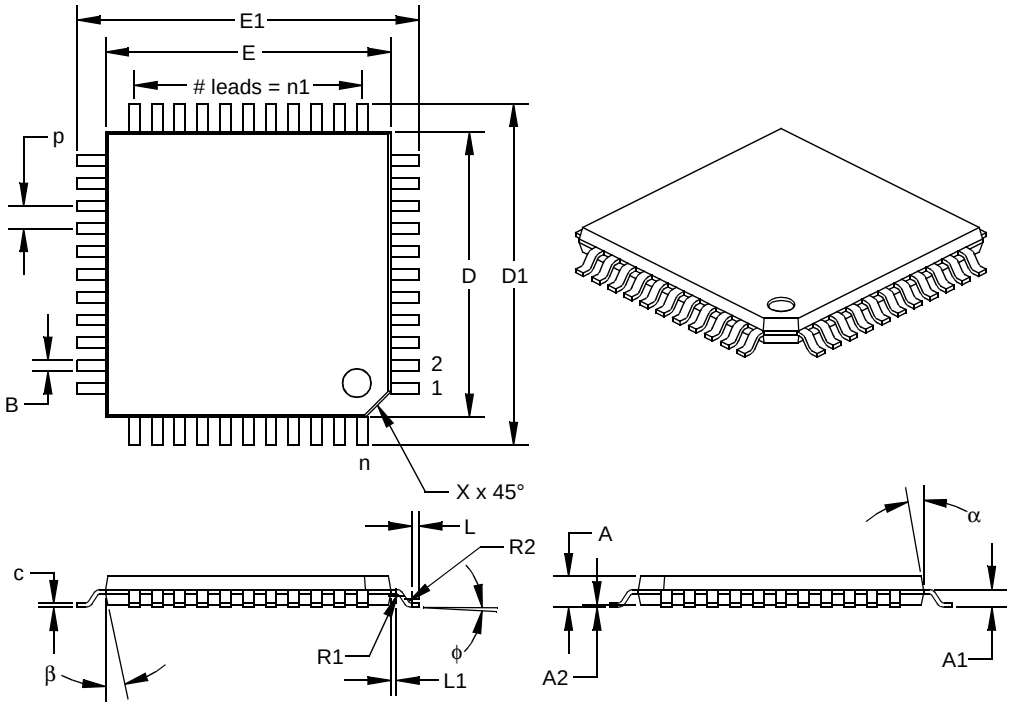

Units		INCHES			MILLIMETERS*		
Dimension Limits		MIN	NOM	MAX	MIN	NOM	MAX
Pitch	p		0.031			0.80	
Number of Pins	n		44			44	
Pins along Width	n1		11			11	
Overall Pack. Height	A	0.039	0.043	0.047	1.00	1.10	1.20
Shoulder Height	A1	0.015	0.025	0.035	0.38	0.64	0.89
Standoff	A2	0.002	0.004	0.006	0.05	0.10	0.15
Shoulder Radius	R1	0.003	0.003	0.010	0.08	0.08	0.25
Gull Wing Radius	R2	0.003	0.006	0.008	0.08	0.14	0.20
Foot Length	L	0.005	0.010	0.015	0.13	0.25	0.38
Foot Angle	ϕ	0	3.5	7	0	3.5	7
Radius Centerline	L1	0.003	0.008	0.013	0.08	0.20	0.33
Lead Thickness	c	0.004	0.006	0.008	0.09	0.15	0.20
Lower Lead Width	B†	0.012	0.015	0.018	0.30	0.38	0.45
Outside Tip Length	D1	0.463	0.472	0.482	11.75	12.00	12.25
Outside Tip Width	E1	0.463	0.472	0.482	11.75	12.00	12.25
Molded Pack. Length	D‡	0.390	0.394	0.398	9.90	10.00	10.10
Molded Pack. Width	E‡	0.390	0.394	0.398	9.90	10.00	10.10
Pin 1 Corner Chamfer	X	0.025	0.035	0.045	0.64	0.89	1.14
Mold Draft Angle Top	α	5	10	15	5	10	15
Mold Draft Angle Bottom	β	5	12	15	5	12	15

* Controlling Parameter.

† Dimension “B” does not include dam-bar protrusions. Dam-bar protrusions shall not exceed 0.003” (0.076 mm) per side or 0.006” (0.152 mm) more than dimension “B.”

‡ Dimensions “D” and “E” do not include mold flash or protrusions. Mold flash or protrusions shall not exceed 0.010” (0.254 mm) per side or 0.020” (0.508 mm) more than dimensions “D” or “E.”

JEDEC equivalent: MS-026 ACB

Package Type: 44-Lead Plastic Leaded Chip Carrier (L) – Square

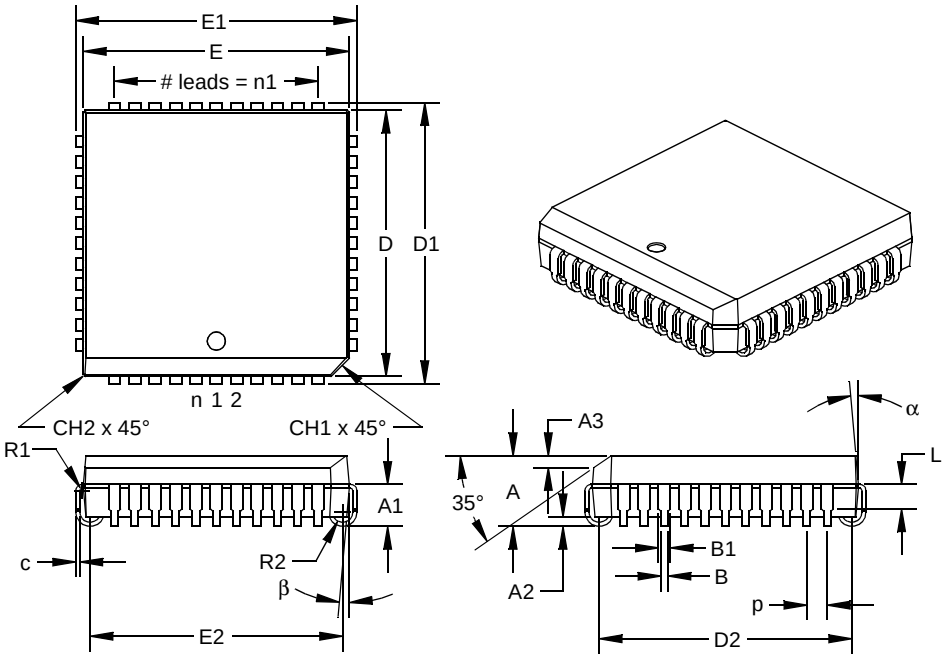

Units		INCHES*			MILLIMETERS		
Dimension Limits		MIN	NOM	MAX	MIN	NOM	MAX
Number of Pins	n		44			44	
Pitch	p		0.050			1.27	
Overall Pack. Height	A	0.165	0.173	0.180	4.19	4.38	4.57
Shoulder Height	A1	0.095	0.103	0.110	2.41	2.60	2.79
Standoff	A2	0.015	0.023	0.030	0.38	0.57	0.76
Side 1 Chamfer Dim.	A3	0.024	0.029	0.034	0.61	0.74	0.86
Corner Chamfer (1)	CH1	0.040	0.045	0.050	1.02	1.14	1.27
Corner Chamfer (other)	CH2	0.000	0.005	0.010	0.00	0.13	0.25
Overall Pack. Width	E1	0.685	0.690	0.695	17.40	17.53	17.65
Overall Pack. Length	D1	0.685	0.690	0.695	17.40	17.53	17.65
Molded Pack. Width	E‡	0.650	0.653	0.656	16.51	16.59	16.66
Molded Pack. Length	D‡	0.650	0.653	0.656	16.51	16.59	16.66
Footprint Width	E2	0.610	0.620	0.630	15.49	15.75	16.00
Footprint Length	D2	0.610	0.620	0.630	15.49	15.75	16.00
Pins along Width	n1		11			11	
Lead Thickness	c	0.008	0.010	0.012	0.20	0.25	0.30
Upper Lead Width	B1†	0.026	0.029	0.032	0.66	0.74	0.81
Lower Lead Width	B	0.015	0.018	0.021	0.38	0.46	0.53
Upper Lead Length	L	0.050	0.058	0.065	1.27	1.46	1.65
Shoulder Inside Radius	R1	0.003	0.005	0.010	0.08	0.13	0.25
J-Bend Inside Radius	R2	0.015	0.025	0.035	0.38	0.64	0.89
Mold Draft Angle Top	α	0	5	10	0	5	10
Mold Draft Angle Bottom	β	0	5	10	0	5	10

* Controlling Parameter.

† Dimension “B1” does not include dam-bar protrusions. Dam-bar protrusions shall not exceed 0.003” (0.076 mm) per side or 0.006” (0.152 mm) more than dimension “B1.”

‡ Dimensions “D” and “E” do not include mold flash or protrusions. Mold flash or protrusions shall not exceed 0.010" (0.254 mm) per side or 0.020" (0.508 mm) more than dimensions “D” or “E.”

JEDEC equivalent: MO-047 AC

APPENDIX A: REVISION HISTORY

Revision A

This is a new data sheet.

APPENDIX B: DEVICE DIFFERENCES

The differences between the devices listed in this data sheet are shown in Table 23-1.

TABLE 23-1: Device Differences

Feature	PIC18C242	PIC18C252	PIC18C442	PIC18C452
Program Memory (Bytes)	8K	16K	8K	16K
Data Memory (Bytes)	16K	32K	16K	32K
A/D Channels	5	5	8	8
Parallel Slave Port (PSP)	No	No	Yes	Yes
Package Types	28-pin DIP 28-pin SOIC 28-pin JW	28-pin DIP 28-pin SOIC 28-pin JW	40-pin DIP 40-pin PLCC 40-pin TQFP 40-pin JW	40-pin DIP 40-pin PLCC 40-pin TQFP 40-pin JW

APPENDIX C: CONVERSION CONSIDERATIONS

This appendix discusses the considerations for converting from previous version of a device to the ones listed in this data sheet. Typically these changes are due to the differences in the process technology used. An example of this type of conversion is from a PIC16C74A to a PIC16C74B.

Not Applicable

APPENDIX D: MIGRATION FROM BASELINE TO ENHANCED DEVICES

This section discusses how to migrate from a Baseline device (i.e., PIC16C5X) to an Enhanced MCU device (i.e., PIC18CXXX).

The following are the list of modifications over the PIC16C5X microcontroller family:

Not Currently Available

APPENDIX E: MIGRATION FROM MIDRANGE TO ENHANCED DEVICES

This section discusses how to migrate from a Midrange device (i.e., PIC16CXXX) to an Enhanced device (i.e., PIC18CXXX).

The following are the list of modifications over the PIC16CXXX microcontroller family:

Not Currently Available

APPENDIX F: MIGRATION FROM HIGH-END TO ENHANCED DEVICES

This section discusses how to migrate from a High-end device (i.e., PIC17CXXX) to an Enhance MCU device (i.e., PIC18CXXX).

The following are the list of modifications over the PIC17CXXX microcontroller family:

Not Currently Available

NOTES:

INDEX

K

M

N

O

P

Q

R

S

T

U

W

X

Z

ON-LINE SUPPORT

Microchip provides on-line support on the Microchip World Wide Web (WWW) site.

The web site is used by Microchip as a means to make files and information easily available to customers. To view the site, the user must have access to the Internet and a web browser, such as Netscape or Microsoft Explorer. Files are also available for FTP download from our FTP site.

Connecting to the Microchip Internet Web Site

The Microchip web site is available by using your favorite Internet browser to attach to:

www.microchip.com

The file transfer site is available by using an FTP service to connect to:

ftp://ftp.microchip.com

The web site and file transfer site provide a variety of services. Users may download files for the latest Development Tools, Data Sheets, Application Notes, User's Guides, Articles and Sample Programs. A variety of Microchip specific business information is also available, including listings of Microchip sales offices, distributors and factory representatives. Other data available for consideration is:

- Latest Microchip Press Releases
- Technical Support Section with Frequently Asked Questions
- Design Tips
- Device Errata
- Job Postings
- Microchip Consultant Program Member Listing
- Links to other useful web sites related to Microchip Products
- Conferences for products, Development Systems, technical information and more
- Listing of seminars and events

Systems Information and Upgrade Hot Line

The Systems Information and Upgrade Line provides system users a listing of the latest versions of all of Microchip's development systems software products. Plus, this line provides information on how customers can receive any currently available upgrade kits.The Hot Line Numbers are:

1- 800-755-2345 for U.S. and most of Canada, and

1- 602-786-7302 for the rest of the world.

981103

READER RESPONSE

It is our intention to provide you with the best documentation possible to ensure successful use of your Microchip product. If you wish to provide your comments on organization, clarity, subject matter, and ways in which our documentation can better serve you, please FAX your comments to the Technical Publications Manager at (602) 786-7578.

Please list the following information, and use this outline to provide us with your comments about this Data Sheet.

To: Technical Publications Manager Total Pages Sent

RE: Reader Response

From: Name _____

Company _____

Address _____

City / State / ZIP / Country _____

Telephone: (_____) _____ - _____ FAX: (_____) _____ - _____

Application (optional):

Would you like a reply? ___Y ___N

Device: **PIC18CXX2** Literature Number: **DS39026B**

Questions:

1. What are the best features of this document?

_____

_____

2. How does this document meet your hardware and software development needs?

_____

_____

3. Do you find the organization of this data sheet easy to follow? If not, why?

_____

_____

4. What additions to the data sheet do you think would enhance the structure and subject?

_____

_____

5. What deletions from the data sheet could be made without affecting the overall usefulness?

_____

_____

6. Is there any incorrect or misleading information (what and where)?

_____

_____

7. How would you improve this document?

_____

_____

8. How would you improve our software, systems, and silicon products?

_____

_____

PIC18CXX2 PRODUCT IDENTIFICATION SYSTEM

To order or obtain information, e.g., on pricing or delivery, refer to the factory or the listed sales office.

PART NO.	–	X	/XX	XXX
Device		Temperature Range	Package	Pattern

Device	PIC18CXX2(1), PIC18CXX2T(2); VDD range 4.2V to 5.5V PIC18LCXX2(1), PIC18LCXX2T(2); VDD range 2.5V to 5.5V
Temperature Range	I = -40°C to+85×C(Industrial) E = -40°C to+125×C(Extended)
Package	JW = Windowed CERDIP(3) PT = TQFP (Thin Quad Flatpack) SO = SOIC SP = Skinny plastic dip P = PDIP L = PLCC
Pattern	QTP, SQTP, Code or Special Requirements (blank otherwise)

Examples:

a) PIC18LC452 - I/P 301 = Industrial temp., PDIP package, 4 MHz, Extended VDD limits, QTP pattern #301.

b) PIC18LC242 - I/SO = Industrial temp., SOIC package, Extended VDD limits.

c) PIC18C442 - E/P = Extended temp., PDIP package, 40MHz, normal VDD limits.

Note1: C = Standard Voltage range
LC = Wide Voltage Range

2: T = in tape and reel - SOIC, PLCC, and TQFP packages only.

3: JW Devices are UV erasable and can be programmed to any device configuration. JW Devices meet the electrical requirement of each oscillator type (including LC devices).

Sales and Support

Data Sheets
Products supported by a preliminary Data Sheet may have an errata sheet describing minor operational differences and recommended workarounds. To determine if an errata sheet exists for a particular device, please contact one of the following:

1. Your local Microchip sales office
2. The Microchip Corporate Literature Center U.S. FAX: (602) 786-7277
3. The Microchip Worldwide Site (www.microchip.com)

Please specify which device, revision of silicon and Data Sheet (include Literature #) you are using.

New Customer Notification System
Register on our web site (www.microchip.com/cn) to receive the most current information on our products.

MICROCHIP

WORLDWIDE SALES AND SERVICE

AMERICAS

Corporate Office
Microchip Technology Inc.
2355 West Chandler Blvd.
Chandler, AZ 85224-6199
Tel: 480-786-7200 Fax: 480-786-7277
Technical Support: 480-786-7627
Web Address: http://www.microchip.com

Atlanta
Microchip Technology Inc.
500 Sugar Mill Road, Suite 200B
Atlanta, GA 30350
Tel: 770-640-0034 Fax: 770-640-0307

Boston
Microchip Technology Inc.
5 Mount Royal Avenue
Marlborough, MA 01752
Tel: 508-480-9990 Fax: 508-480-8575

Chicago
Microchip Technology Inc.
333 Pierce Road, Suite 180
Itasca, IL 60143
Tel: 630-285-0071 Fax: 630-285-0075

Dallas
Microchip Technology Inc.
4570 Westgrove Drive, Suite 160
Addison, TX 75248
Tel: 972-818-7423 Fax: 972-818-2924

Dayton
Microchip Technology Inc.
Two Prestige Place, Suite 150
Miamisburg, OH 45342
Tel: 937-291-1654 Fax: 937-291-9175

Detroit
Microchip Technology Inc.
Tri-Atria Office Building
32255 Northwestern Highway, Suite 190
Farmington Hills, MI 48334
Tel: 248-538-2250 Fax: 248-538-2260

Los Angeles
Microchip Technology Inc.
18201 Von Karman, Suite 1090
Irvine, CA 92612
Tel: 949-263-1888 Fax: 949-263-1338

New York
Microchip Technology Inc.
150 Motor Parkway, Suite 202
Hauppauge, NY 11788
Tel: 631-273-5305 Fax: 631-273-5335

San Jose
Microchip Technology Inc.
2107 North First Street, Suite 590
San Jose, CA 95131
Tel: 408-436-7950 Fax: 408-436-7955

AMERICAS (continued)

Toronto
Microchip Technology Inc.
5925 Airport Road, Suite 200
Mississauga, Ontario L4V 1W1, Canada
Tel: 905-405-6279 Fax: 905-405-6253

ASIA/PACIFIC

Hong Kong
Microchip Asia Pacific
Unit 2101, Tower 2
Metroplaza
223 Hing Fong Road
Kwai Fong, N.T., Hong Kong
Tel: 852-2-401-1200 Fax: 852-2-401-3431

Beijing
Microchip Technology, Beijing
Unit 915, 6 Chaoyangmen Bei Dajie
Dong Erhuan Road, Dongcheng District
New China Hong Kong Manhattan Building
Beijing 100027 PRC
Tel: 86-10-85282100 Fax: 86-10-85282104

India
Microchip Technology Inc.
India Liaison Office
No. 6, Legacy, Convent Road
Bangalore 560 025, India
Tel: 91-80-229-0061 Fax: 91-80-229-0062

Japan
Microchip Technology Intl. Inc.
Benex S-1 6F
3-18-20, Shinyokohama
Kohoku-Ku, Yokohama-shi
Kanagawa 222-0033 Japan
Tel: 81-45-471- 6166 Fax: 81-45-471-6122

Korea
Microchip Technology Korea
168-1, Youngbo Bldg. 3 Floor
Samsung-Dong, Kangnam-Ku
Seoul, Korea
Tel: 82-2-554-7200 Fax: 82-2-558-5934

Shanghai
Microchip Technology
RM 406 Shanghai Golden Bridge Bldg.
2077 Yan'an Road West, Hong Qiao District
Shanghai, PRC 200335
Tel: 86-21-6275-5700 Fax: 86 21-6275-5060

ASIA/PACIFIC (continued)

Singapore
Microchip Technology Singapore Pte Ltd.
200 Middle Road
#07-02 Prime Centre
Singapore 188980
Tel: 65-334-8870 Fax: 65-334-8850

Taiwan, R.O.C
Microchip Technology Taiwan
10F-1C 207
Tung Hua North Road
Taipei, Taiwan, ROC
Tel: 886-2-2717-7175 Fax: 886-2-2545-0139

EUROPE

United Kingdom
Arizona Microchip Technology Ltd.
505 Eskdale Road
Winnersh Triangle
Wokingham
Berkshire, England RG41 5TU
Tel: 44 118 921 5858 Fax: 44-118 921-5835

Denmark
Microchip Technology Denmark ApS
Regus Business Centre
Lautrup hoj 1-3
Ballerup DK-2750 Denmark
Tel: 45 4420 9895 Fax: 45 4420 9910

France
Arizona Microchip Technology SARL
Parc d'Activite du Moulin de Massy
43 Rue du Saule Trapu
Batiment A - ler Etage
91300 Massy, France
Tel: 33-1-69-53-63-20 Fax: 33-1-69-30-90-79

Germany
Arizona Microchip Technology GmbH
Gustav-Heinemann-Ring 125
D-81739 München, Germany
Tel: 49-89-627-144 0 Fax: 49-89-627-144-44

Italy
Arizona Microchip Technology SRL
Centro Direzionale Colleoni
Palazzo Taurus 1 V. Le Colleoni 1
20041 Agrate Brianza
Milan, Italy
Tel: 39-039-65791-1 Fax: 39-039-6899883

11/15/99

DNV Certification, Inc. USA
ANSI-RAB QMS ACCREDITED
DNV
DNV MSC The Netherlands Accredited by the RvA
ISO 9001 / QS-9000 REGISTERED FIRM

Microchip received QS-9000 quality system certification for its worldwide headquarters, design and wafer fabrication facilities in Chandler and Tempe, Arizona in July 1999. The Company's quality system processes and procedures are QS-9000 compliant for its PICmicro® 8-bit MCUs, KEELOQ® code hopping devices, Serial EEPROMs and microperipheral products. In addition, Microchip's quality system for the design and manufacture of development systems is ISO 9001 certified.