Bernstein
Bernstein AG
Postfach 1164
D-32437 Porta Westfalica

Technical data sheet

ENM-SU1Z AHS-V | 608.2385.012

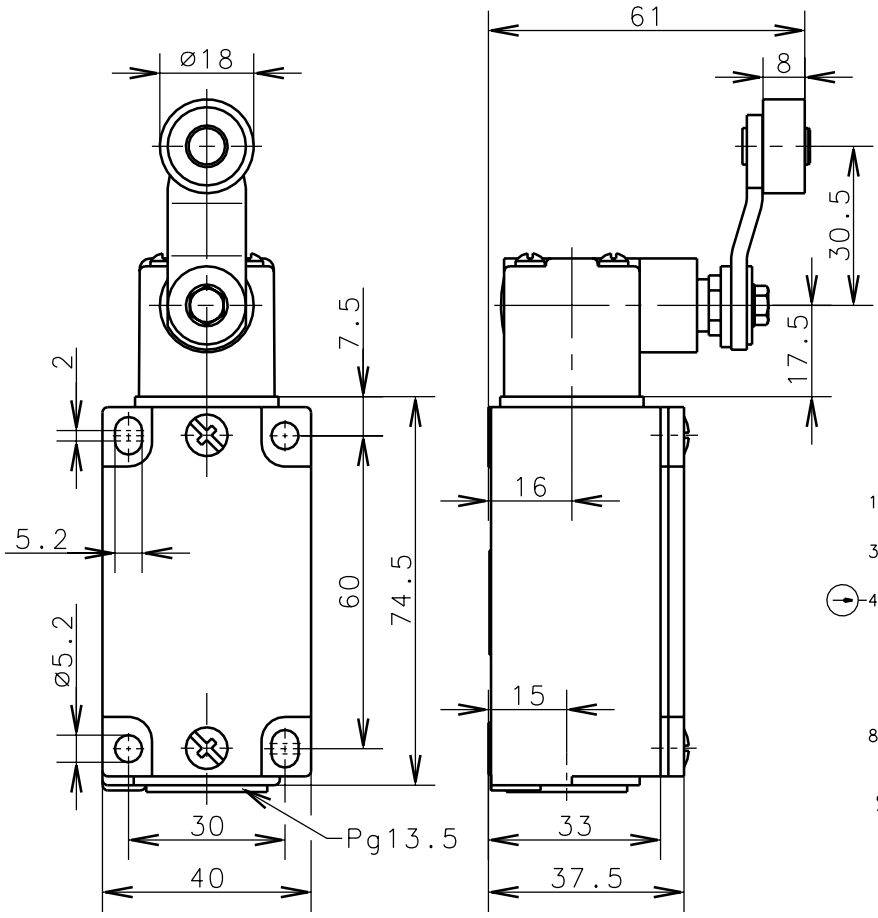

Positive opening operation according to DIN EN 60947-5-1 IEC 947-5-1

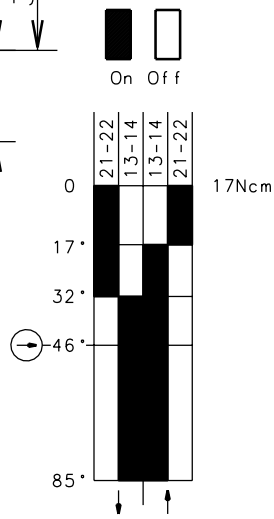

Switching diagram

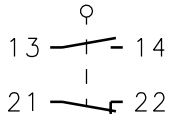

Switching symbol

Tolerance: operating point ±3.5°; operating torque ±10%

Mechanical features

Enclosure:	Al-die cast
Cover:	Al-plate
Actuator:	Turret head (Zn-die cast), roller (thermoplast), lever (st)
Ambient air temperature:	-30°C up to +80°C
Contact type:	1 NC-contact, 1 NO-contact (Zb)
Mechanical life:	10×10^6 switch operations
Switch frequency:	max. 100/min
Mounting:	4 x M5
Connection type:	4 screw connections (M3,5)
Cable entry size:	1 x Pg13.5
Weight:	approx. 0,28kg

Electrical features

Max. Voltage:	500 V AC
Max. enduring current:	I th 10A
Max. inrush current:	according to IEC 947-5-1, AC 15, DC 13
Standards:	according to EN 60204; EN 60947-1; EN 60947-5-1
Protection class (IP-Code):	IP65 according to EN 60529; DIN VDE 0470 T1
CSA:	10A 300V AC, A300 (same polarity)
Short-circuit protection:	Fuse 2A gL/gG, IEC/EN 60947-5-1, appendix K

Approach possibilities
By loosening 4 screws it is possible to turn the actuator through 90° so that 4 approach possibilities can be achieved.

Remarks
The moving parts should be oiled periodically.
The planned protection class (IP-Code) is valid only at closed cover and when using an at least equivalent cable gland.

Schutzvermerk nach DIN 34 beachten
Copyright reserved

12.09.2000

Copies are not retreated in case of alternatios.