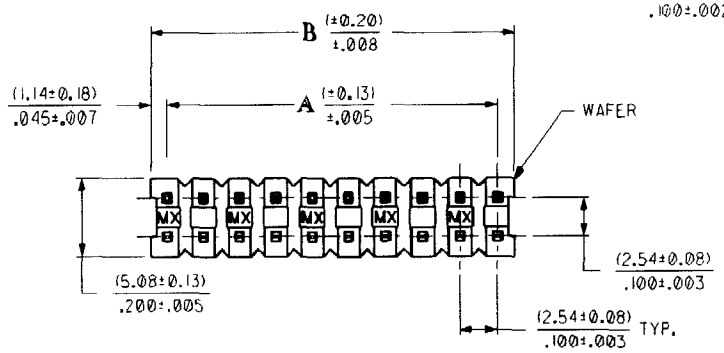

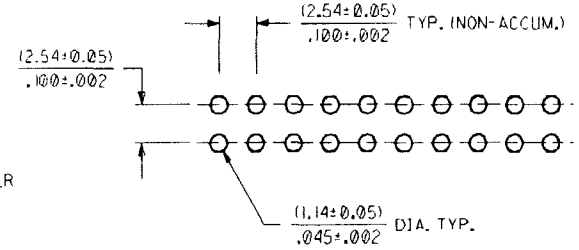

RECOMMENDED P.C. BOARD LAYOUT

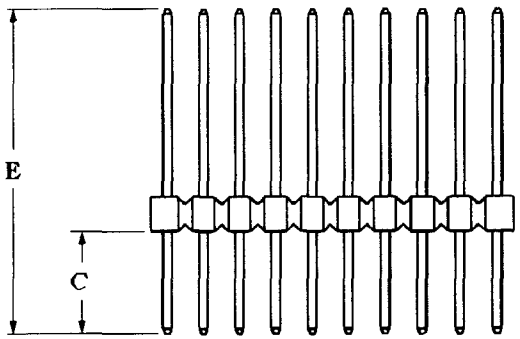

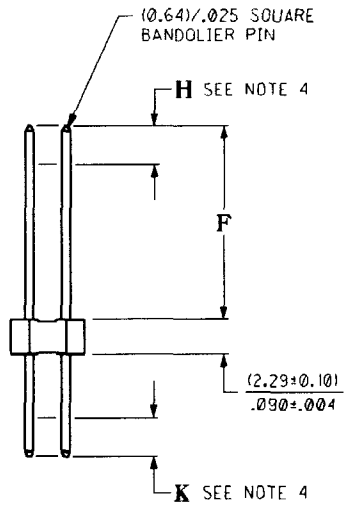

CKT. SIZE	DIM. A (MM)	DIM. A INCH	DIM. B (MM)	DIM. B INCH
4	(2.54)	.100	(4.83)	.190
6	(5.08)	.200	(7.37)	.290
8	(7.62)	.300	(9.91)	.390
10	(10.16)	.400	(12.45)	.490
12	(12.70)	.500	(14.99)	.590
14	(15.24)	.600	(17.53)	.690
16	(17.78)	.700	(20.07)	.790
18	(20.32)	.800	(22.61)	.890
20	(22.86)	.900	(25.15)	.990
22	(25.40)	1.000	(27.69)	1.090
24	(27.94)	1.100	(30.23)	1.190
26	(30.48)	1.200	(32.77)	1.290
28	(33.02)	1.300	(35.31)	1.390
30	(35.56)	1.400	(37.58)	1.490
32	(38.10)	1.500	(40.39)	1.590
34	(40.64)	1.600	(42.93)	1.690
36	(43.18)	1.700	(45.47)	1.790
38	(45.72)	1.800	(48.01)	1.890
40	(48.26)	1.900	(50.55)	1.990
42	(50.80)	2.000	(53.09)	2.090
44	(53.34)	2.100	(55.63)	2.190
46	(55.88)	2.200	(58.17)	2.290
48	(58.42)	2.300	(60.71)	2.390
50	(60.96)	2.400	(63.25)	2.490
52	(63.50)	2.500	(65.79)	2.590
54	(66.04)	2.600	(68.33)	2.690
56	(68.58)	2.700	(70.87)	2.790
58	(71.12)	2.800	(73.41)	2.890
60	(73.66)	2.900	(75.95)	2.990
62	(76.20)	3.000	(78.49)	3.090
64	(78.74)	3.100	(81.03)	3.190
66	(81.28)	3.200	(83.57)	3.290
68	(83.82)	3.300	(86.11)	3.390
70	(86.36)	3.400	(88.65)	3.490
72	(88.90)	3.500	(91.19)	3.590
74	(91.44)	3.600	(93.73)	3.690
76	(93.98)	3.700	(96.27)	3.790
78	(96.52)	3.800	(98.81)	3.890
80	(99.06)	3.900	(101.35)	3.990

LTR.	REVISIONS
L1	ADDED TOLERANCES ECN #UDT1999-0410 DMORGAN 98/12/02
L	ADD NEW 8 CKT OPT ECN #UDT1999-0206 DMORGAN 98/09/16
K	CREATED SHEET 7 ECR #U80308 MCGRATH 97/07/15
J1	ADD A-8624-1253 ECR U7-0642 MCFARLAN 97/1/3
J	REVISED PER ECN# U70416 SCARTH 96/12/04
I	REVISED PER ECR NO U73000 BARKER 10/28/96
H	REVISED PER ECR NO U61415 05/10/96 TSE
G	REVISED PLATE 588 PER ECR NO U60907 96/02/01 BMS
F	CHANGED PACKAGING PER ECR NO U60549 11-03-95 DB/BJS
E3	ADDED -1201/-1240 PER ECR NO U60344 09-11-95 BJS
E2	ADDED EDP NO'S PER ECR # U60272 95/08/25 CAC
E1	ADDED EDP -8032 PER ECR #U51312 95/06/29 CAC
E	CHANGED PIN DIMEN PER ECR NO U50305 10-04-94 BJS
D1	ADDED -0681/-0720 PER ECR NO U50188 09-09-94 BJS
D	REVISED NOTE #6 PER ECR #U40640 06/16/94 BARKER
C1	ADDED -0928&-0933 PER ECR #U40683 05/27/94 REED
C	DELETED/ADDED EDP'S PER ECR # U40295 03/01/94 REED
B1	ADDED EDP NOS PER ECR # U31521 10/15/93 REED
B	REVISED PER ECR # U30385 05/17/93 REED
A	RELEASED PER ECR # U30114 02/03/93 MGB

MFG.	SH.	REV.
	7	L1
	6	L1
	5	L1
	4	L1
	3	L1
	2	L1
	1	L1

NOTES:

1 - PIN PUSHOUT FORCE: 4 LBS. MIN. (IN EITHER DIRECTION)
2 - FOR ILLUSTRATION PURPOSES, 20 (DUAL 10) CIRCUIT SIZE IS SHOWN.
3 - PINS MUST MEET MOLEX SOLDERABILITY SPECIFICATION ES-152. EXCEPT VOIDS ARE PERMISSIBLE AT BANDOLIER PIN FAYING SURFACE (APPROX. .025 LONG X .006 WIDE REF.- 2 LOCATIONS).
4 - MEASURE POINT FOR PLATING THICKNESS.
5 - THIS PART CONFORMS TO MOLEX PRODUCT SPECIFICATION PS-8624.
6 - PACKAGING INFORMATION:
(UNLESS OTHERWISE NOTED IN TABLES)
PER PACKAGING DRAWING NO. PK-70873-0353
BULK PACKAGED IN BAGS

MATERIAL:

WAFER - G.F. POLYESTER; 94V-0; COLOR: BLACK
PIN - PHOSPHOR BRONZE

FINISH (PER ES-88):

(164) - .000150 MIN. TIN/LEAD PLATE OVER .000050 MIN. NICKEL PLATE.
(571) - .000015 MIN. GOLD PLATE IN SELECT AREA, .000075 MIN. TIN/LEAD PLATE IN SELECT AREA, OVER .000050 MIN. NICKEL PLATE OVERALL.
(574) - .000030 MIN. GOLD PLATE IN SELECT AREA, .000075 MIN. TIN/LEAD PLATE IN SELECT AREA, OVER .000050 MIN. NICKEL PLATE OVERALL.
(561) - .000030 MIN. GOLD PLATE IN SELECT AREAS OVER .000050 MIN. NICKEL PLATE OVERALL.
(544) - .000005 MIN. GOLD FLASH IN SELECT AREA, .000075 MIN. TIN/LEAD PLATE IN SELECT AREA, OVER .000050 MIN. NICKEL PLATE OVERALL.

DIMENSIONS SHOWN (METRIC) INCH
UNLESS OTHERWISE SPECIFIED TOLERANCES: ANGULAR ± 1/2°

	INCH	METRIC
3 PLACE	± .005	
2 PLACE	± .01	± 0.13
1 PLACE		± 0.25

DRAFT WHERE APPLICABLE MUST REMAIN WITHIN DIMENSIONS

DRAWN BY EJK | CHK'D BY AAB | APPR'D BY WAZ | SCALE 4 : 1

▽ = 0 ▼ = 0 REVISE ONLY ON CAD SYSTEM

TITLE: SALES ASSY-DUAL ROW WAFER W/BREAK-OFF OPTION .025 SQ. PINS/.100 GRID

MOLEX INCORPORATED LISLE, ILL. 60532 U.S.A.

SHEET NO. 1 OF 7 | DATE 11/30/88

PART NO. SEE CHARTS | DRWG. NO. SDA-8624-0001-5000

FILE NAME S8624X1

THIS DRAWING CONTAINS INFORMATION THAT IS PROPRIETARY TO MOLEX INC. AND SHOULD NOT BE USED WITHOUT WRITTEN PERMISSION

DIV. DA | SIZE C

MOLES01844

ENGINEERING NUMBER A-8624	RELEASE FOR MANUFACTURE			C ± (0.38) .015		E ± (0.25) .010	F ± (0.25) .010			PLATE PER ES-88	CONNECTOR END PLATING TYPE	H MEAS.		P.C. BOARD END PLATING TYPE	K MEAS.		FOR PACKAGING INFORMATION, SEE NOTE 6, SHEET 1 (UNLESS OTHERWISE SPECIFIED BELOW)
-0321/-0360	R.F.M.			(2.79) .110		(13.21) .520	(8.13) .320			164	TIN/LEAD	(4.57) .180		TIN/LEAD	(1.27) .050		
-0361/-0400	R.F.M.			(2.79) .110		(13.21) .520	(8.13) .320			571	GOLD	(4.57) .180		TIN/LEAD	(1.27) .050		
-0401/-0440	R.F.M.			(2.79) .110		(13.21) .520	(8.13) .320			574	GOLD	(4.57) .180		TIN/LEAD	(1.27) .050		
-0441/-0480																	
-0481/-0520	R.F.M.			(4.70) .185		(15.11) .595	(8.13) .320			164	TIN/LEAD	(4.57) .180		TIN/LEAD	(1.27) .050		
-0521/-0560	R.F.M.			(4.70) .185		(15.11) .595	(8.13) .320			571	GOLD	(4.57) .180		TIN/LEAD	(1.27) .050		

CKTS	EDP NUMBER	ENG NUMBER	EDP NUMBER	ENG NUMBER	EDP NUMBER	ENG NUMBER	EDP NUMBER	ENG NUMBER	EDP NUMBER	ENG NUMBER	EDP NUMBER	ENG NUMBER	EDP NUMBER	ENG NUMBER	CKTS
02			N.A.	A-8624-0321	N.A.	A-8624-0361	N.A.	A-8624-0401	N.A.	A-8624-0441	N.A.	A-8624-0481	N.A.	A-8624-0521	02
04			10-88-1043	A-8624-0322	10-89-1043	A-8624-0362	10-89-2043	A-8624-0402		A-8624-0442	10-88-1044	A-8624-0482	10-89-1044	A-8624-0522	04
06			10-88-1063	A-8624-0323	10-89-1063	A-8624-0363	10-89-2063	A-8624-0403		A-8624-0443	10-88-1064	A-8624-0483	10-89-1064	A-8624-0523	06
08			10-88-1083	A-8624-0324	10-89-1083	A-8624-0364	10-89-2083	A-8624-0404		A-8624-0444	10-88-1084	A-8624-0484	10-89-1084	A-8624-0524	08
10			10-88-1103	A-8624-0325	10-89-1103	A-8624-0365	10-89-2103	A-8624-0405		A-8624-0445	10-88-1104	A-8624-0485	10-89-1104	A-8624-0525	10
12			10-88-1123	A-8624-0326	10-89-1123	A-8624-0366	10-89-2123	A-8624-0406		A-8624-0446	10-88-1124	A-8624-0486	10-89-1124	A-8624-0526	12
14			10-88-1143	A-8624-0327	10-89-1143	A-8624-0367	10-89-2143	A-8624-0407		A-8624-0447	10-88-1144	A-8624-0487	10-89-1144	A-8624-0527	14
16			10-88-1163	A-8624-0328	10-89-1163	A-8624-0368	10-89-2163	A-8624-0408		A-8624-0448	10-88-1164	A-8624-0488	10-89-1164	A-8624-0528	16
18			10-88-1183	A-8624-0329	10-89-1183	A-8624-0369	10-89-2183	A-8624-0409		A-8624-0449	10-88-1184	A-8624-0489	10-89-1184	A-8624-0529	18
20			10-88-1203	A-8624-0330	10-89-1203	A-8624-0370	10-89-2203	A-8624-0410		A-8624-0450	10-88-1204	A-8624-0490	10-89-1204	A-8624-0530	20
22			10-88-1223	A-8624-0331	10-89-1223	A-8624-0371	10-89-2223	A-8624-0411		A-8624-0451	10-88-1224	A-8624-0491	10-89-1224	A-8624-0531	22
24			10-88-1243	A-8624-0332	10-89-1243	A-8624-0372	10-89-2243	A-8624-0412		A-8624-0452	10-88-1244	A-8624-0492	10-89-1244	A-8624-0532	24
26			10-88-1263	A-8624-0333	10-89-1263	A-8624-0373	10-89-2263	A-8624-0413		A-8624-0453	10-88-1264	A-8624-0493	10-89-1264	A-8624-0533	26
28			10-88-1283	A-8624-0334	10-89-1283	A-8624-0374	10-89-2283	A-8624-0414		A-8624-0454	10-88-1284	A-8624-0494	10-89-1284	A-8624-0534	28
30			10-88-1303	A-8624-0335	10-89-1303	A-8624-0375	10-89-2303	A-8624-0415		A-8624-0455	10-88-1304	A-8624-0495	10-89-1304	A-8624-0535	30
32			10-88-1323	A-8624-0336	10-89-1323	A-8624-0376	10-89-2323	A-8624-0416		A-8624-0456	10-88-1324	A-8624-0496	10-89-1324	A-8624-0536	32
34			10-88-1343	A-8624-0337	10-89-1343	A-8624-0377	10-89-2343	A-8624-0417		A-8624-0457	10-88-1344	A-8624-0497	10-89-1344	A-8624-0537	34
36			10-88-1363	A-8624-0338	10-89-1363	A-8624-0378	10-89-2363	A-8624-0418		A-8624-0458	10-88-1364	A-8624-0498	10-89-1364	A-8624-0538	36
38			10-88-1383	A-8624-0339	10-89-1383	A-8624-0379	10-89-2383	A-8624-0419		A-8624-0459	10-88-1384	A-8624-0499	10-89-1384	A-8624-0539	38
40			10-88-1403	A-8624-0340	10-89-1403	A-8624-0380	10-89-2403	A-8624-0420		A-8624-0460	10-88-1404	A-8624-0500	10-89-1404	A-8624-0540	40
42			10-88-1423	A-8624-0341	10-89-1423	A-8624-0381	10-89-2423	A-8624-0421		A-8624-0461	10-88-1424	A-8624-0501	10-89-1424	A-8624-0541	42
44			10-88-1443	A-8624-0342	10-89-1443	A-8624-0382	10-89-2443	A-8624-0422		A-8624-0462	10-88-1444	A-8624-0502	10-89-1444	A-8624-0542	44
46			10-88-1463	A-8624-0343	10-89-1463	A-8624-0383	10-89-2463	A-8624-0423		A-8624-0463	10-88-1464	A-8624-0503	10-89-1464	A-8624-0543	46
48			10-88-1483	A-8624-0344	10-89-1483	A-8624-0384	10-89-2483	A-8624-0424		A-8624-0464	10-88-1484	A-8624-0504	10-89-1484	A-8624-0544	48
50			10-88-1503	A-8624-0345	10-89-1503	A-8624-0385	10-89-2503	A-8624-0425		A-8624-0465	10-88-1504	A-8624-0505	10-89-1504	A-8624-0545	50
52			10-88-1523	A-8624-0346	10-89-1523	A-8624-0386	10-89-2523	A-8624-0426		A-8624-0466	10-88-1524	A-8624-0506	10-89-1524	A-8624-0546	52
54			10-88-1543	A-8624-0347	10-89-1543	A-8624-0387	10-89-2543	A-8624-0427		A-8624-0467	10-88-1544	A-8624-0507	10-89-1544	A-8624-0547	54
56			10-88-1563	A-8624-0348	10-89-1563	A-8624-0388	10-89-2563	A-8624-0428		A-8624-0468	10-88-1564	A-8624-0508	10-89-1564	A-8624-0548	56
58			10-88-1583	A-8624-0349	10-89-1583	A-8624-0389	10-89-2583	A-8624-0429		A-8624-0469	10-88-1584	A-8624-0509	10-89-1584	A-8624-0549	58
60			10-88-1603	A-8624-0350	10-89-1603	A-8624-0390	10-89-2603	A-8624-0430		A-8624-0470	10-88-1604	A-8624-0510	10-89-1604	A-8624-0550	60
62			10-88-1623	A-8624-0351	10-89-1623	A-8624-0391	10-89-2623	A-8624-0431		A-8624-0471	10-88-1624	A-8624-0511	10-89-1624	A-8624-0551	62
64			10-88-1643	A-8624-0352	10-89-1643	A-8624-0392	10-89-2643	A-8624-0432		A-8624-0472	10-88-1644	A-8624-0512	10-89-1644	A-8624-0552	64
66			10-88-1663	A-8624-0353	10-89-1663	A-8624-0393	10-89-2663	A-8624-0433		A-8624-0473	10-88-1664	A-8624-0513	10-89-1664	A-8624-0553	66
68			10-88-1683	A-8624-0354	10-89-1683	A-8624-0394	10-89-2683	A-8624-0434		A-8624-0474	10-88-1684	A-8624-0514	10-89-1684	A-8624-0554	68
70			10-88-1703	A-8624-0355	10-89-1703	A-8624-0395	10-89-2703	A-8624-0435		A-8624-0475	10-88-1704	A-8624-0515	10-89-1704	A-8624-0555	70
72			10-88-1723	A-8624-0356	10-89-1723	A-8624-0396	10-89-2723	A-8624-0436		A-8624-0476	10-88-1724	A-8624-0516	10-89-1724	A-8624-0556	72
74			10-88-1743	A-8624-0357	10-89-1743	A-8624-0397	10-89-2743	A-8624-0437		A-8624-0477	10-88-1744	A-8624-0517	10-89-1744	A-8624-0557	74
76			10-88-1763	A-8624-0358	10-89-1763	A-8624-0398	10-89-2763	A-8624-0438		A-8624-0478	10-88-1764	A-8624-0518	10-89-1764	A-8624-0558	76
78			10-88-1783	A-8624-0359	10-89-1783	A-8624-0399	10-89-2783	A-8624-0439		A-8624-0479	10-88-1784	A-8624-0519	10-89-1784	A-8624-0559	78
80			10-88-1803	A-8624-0360	10-89-1803	A-8624-0400	10-89-2803	A-8624-0440		A-8624-0480	10-88-1804	A-8624-0520	10-89-1804	A-8624-0560	80

LTR.	REVISIONS	LTR.	REVISIONS
		J	SEE SHEET 1
		F	SEE SHEET 1
		D1	SEE SHEET 1
		C	SEE SHEET 1
		B1	SEE SHEET 1
		B	SEE SHEET 1
L1	SEE SHEET 1	A	SEE SHEET 1

DIMENSIONS SHOWN (METRIC) INCH
UNLESS OTHERWISE SPECIFIED TOLERANCES: ANGULAR ± 1/2°

	INCH	METRIC
3 PLACE	±	
2 PLACE	±	±
1 PLACE		±

DRAFT WHERE APPLICABLE MUST REMAIN WITHIN DIMENSIONS

DRAWN BY EJK | CHK'D BY EJK | APP'D BY WAZ | SCALE :

▽ = 0 ▼ = 0 REVISE ONLY ON CAD SYSTEM

TITLE
SALES ASSY-DUAL ROW WAFER W/BREAK-OFF OPTION .025 SQ. PINS/.100 GRID

MOLEX INCORPORATED
LISLE, ILL. 60532 U.S.A.

SHEET NO. 3 | DATE 08/15/88

PART NO. SEE CHART | DRWG NO. SDA-8624-0001-5000

FILE NAME S8624X3

THIS DRAWING CONTAINS INFORMATION THAT IS PROPRIETARY TO MOLEX INC AND SHOULD NOT BE USED WITHOUT WRITTEN PERMISSION

DIV. DA | SIZE C

ENGINEERING NUMBER A-8624	RELEASE FOR MANUFACTURE			C ±(0.38) .015		E ±(0.25) .010	F ±(0.25) .010			PLATE PER ES-88	CONNECTOR END PLATING TYPE	H MEAS.		P.C. BOARD END PLATING TYPE	K MEAS.		FOR PACKAGING INFORMATION, SEE NOTE 6, SHEET 1 (UNLESS OTHERWISE SPECIFIED BELOW)
-0561/-0600	R.F.M.			(4.70) .185		(15.11) .595	(8.13) .320			574	GOLD	(4.57) .180		TIN/LEAD	(1.27) .050		
-0641/-0680	R.F.M.			(2.72) .107		(11.10) .437	(6.10) .240			544	GOLD	(2.54) .100		TIN/LEAD	(1.27) .050		
-0681/-0720	R.F.M.			(5.64) .222		(15.75) .620	(7.82) .308			164	TIN/LEAD	(2.54) .100		TIN/LEAD	(1.27) .050		
-0721/-0760	R.F.M.			(0.56) .022 MAX.		(13.21) .520	(10.67) .420 ±(0.13) .005			164	TIN/LEAD	(2.54) .100		N/A	N/A N/A		PK-70873-0688 ALL CIRCUIT SIZES
-0761/-0800																	
-0801/-0840																	

CKTS	EDP NUMBER	ENG NUMBER	EDP NUMBER	ENG NUMBER	EDP NUMBER	ENG NUMBER	EDP NUMBER	ENG NUMBER	EDP NUMBER	ENG NUMBER	EDP NUMBER	ENG NUMBER	EDP NUMBER	ENG NUMBER	CKTS
02	N.A.	A-8624-0561			N.A.	A-8624-0641	N.A.	A-8624-0681	N.A.	A-8624-0721	N.A.	A-8624-0761	N.A.	A-8624-0801	02
04	10-89-2044	A-8624-0562			10-89-9047	A-8624-0642	10-89-9048	A-8624-0682		A-8624-0722		A-8624-0762		A-8624-0802	04
06	10-89-2064	A-8624-0563			10-89-9067	A-8624-0643	10-89-9068	A-8624-0683		A-8624-0723		A-8624-0763		A-8624-0803	06
08	10-89-2084	A-8624-0564			10-89-9087	A-8624-0644	10-89-9088	A-8624-0684		A-8624-0724		A-8624-0764		A-8624-0804	08
10	10-89-2104	A-8624-0565			10-89-9107	A-8624-0645	10-89-9108	A-8624-0685		A-8624-0725		A-8624-0765		A-8624-0805	10
12	10-89-2124	A-8624-0566			10-89-9127	A-8624-0646	10-89-9128	A-8624-0686	10-89-7124	A-8624-0726		A-8624-0766		A-8624-0806	12
14	10-89-2144	A-8624-0567			10-89-9147	A-8624-0647	10-89-9148	A-8624-0687		A-8624-0727		A-8624-0767		A-8624-0807	14
16	10-89-2164	A-8624-0568			10-89-9167	A-8624-0648	10-89-9168	A-8624-0688		A-8624-0728		A-8624-0768		A-8624-0808	16
18	10-89-2184	A-8624-0569			10-89-9187	A-8624-0649	10-89-9188	A-8624-0689		A-8624-0729		A-8624-0769		A-8624-0809	18
20	10-89-2204	A-8624-0570			10-89-9207	A-8624-0650	10-89-9208	A-8624-0690		A-8624-0730		A-8624-0770		A-8624-0810	20
22	10-89-2224	A-8624-0571			10-89-9227	A-8624-0651	10-89-9228	A-8624-0691	10-89-7224	A-8624-0731		A-8624-0771		A-8624-0811	22
24	10-89-2244	A-8624-0572			10-89-9247	A-8624-0652	10-89-9248	A-8624-0692		A-8624-0732		A-8624-0772		A-8624-0812	24
26	10-89-2264	A-8624-0573			10-89-9267	A-8624-0653	10-89-9268	A-8624-0693		A-8624-0733		A-8624-0773		A-8624-0813	26
28	10-89-2284	A-8624-0574			10-89-9287	A-8624-0654	10-89-9288	A-8624-0694		A-8624-0734		A-8624-0774		A-8624-0814	28
30	10-89-2304	A-8624-0575			10-89-9307	A-8624-0655	10-89-9308	A-8624-0695		A-8624-0735		A-8624-0775		A-8624-0815	30
32	10-89-2324	A-8624-0576			10-89-9327	A-8624-0656	10-89-9328	A-8624-0696		A-8624-0736		A-8624-0776		A-8624-0816	32
34	10-89-2344	A-8624-0577			10-89-9347	A-8624-0657	10-89-9348	A-8624-0697		A-8624-0737		A-8624-0777		A-8624-0817	34
36	10-89-2364	A-8624-0578			10-89-9367	A-8624-0658	10-89-9368	A-8624-0698		A-8624-0738		A-8624-0778		A-8624-0818	36
38	10-89-2384	A-8624-0579			10-89-9387	A-8624-0659	10-89-9388	A-8624-0699		A-8624-0739		A-8624-0779		A-8624-0819	38
40	10-89-2404	A-8624-0580			10-89-9407	A-8624-0660	10-89-9408	A-8624-0700		A-8624-0740		A-8624-0780		A-8624-0820	40
42	10-89-2424	A-8624-0581			10-89-9427	A-8624-0661	10-89-9428	A-8624-0701		A-8624-0741		A-8624-0781		A-8624-0821	42
44	10-89-2444	A-8624-0582			10-89-9447	A-8624-0662	10-89-9448	A-8624-0702		A-8624-0742		A-8624-0782		A-8624-0822	44
46	10-89-2464	A-8624-0583			10-89-9467	A-8624-0663	10-89-9468	A-8624-0703		A-8624-0743		A-8624-0783		A-8624-0823	46
48	10-89-2484	A-8624-0584			10-89-9487	A-8624-0664	10-89-9488	A-8624-0704		A-8624-0744		A-8624-0784		A-8624-0824	48
50	10-89-2504	A-8624-0585			10-89-9507	A-8624-0665	10-89-9508	A-8624-0705		A-8624-0745		A-8624-0785		A-8624-0825	50
52	10-89-2524	A-8624-0586			10-89-9527	A-8624-0666	10-89-9528	A-8624-0706		A-8624-0746		A-8624-0786		A-8624-0826	52
54	10-89-2544	A-8624-0587			10-89-9547	A-8624-0667	10-89-9548	A-8624-0707		A-8624-0747		A-8624-0787		A-8624-0827	54
56	10-89-2564	A-8624-0588			10-89-9567	A-8624-0668	10-89-9568	A-8624-0708		A-8624-0748		A-8624-0788		A-8624-0828	56
58	10-89-2584	A-8624-0589			10-89-9587	A-8624-0669	10-89-9588	A-8624-0709		A-8624-0749		A-8624-0789		A-8624-0829	58
60	10-89-2604	A-8624-0590			10-89-9607	A-8624-0670	10-89-9608	A-8624-0710		A-8624-0750		A-8624-0790		A-8624-0830	60
62	10-89-2624	A-8624-0591			10-89-9627	A-8624-0671	10-89-9628	A-8624-0711		A-8624-0751		A-8624-0791		A-8624-0831	62
64	10-89-2644	A-8624-0592			10-89-9647	A-8624-0672	10-89-9648	A-8624-0712		A-8624-0752		A-8624-0792		A-8624-0832	64
66	10-89-2664	A-8624-0593			10-89-9667	A-8624-0673	10-89-9668	A-8624-0713		A-8624-0753		A-8624-0793		A-8624-0833	66
68	10-89-2684	A-8624-0594			10-89-9687	A-8624-0674	10-89-9688	A-8624-0714		A-8624-0754		A-8624-0794		A-8624-0834	68
70	10-89-2704	A-8624-0595			10-89-9707	A-8624-0675	10-89-9708	A-8624-0715		A-8624-0755		A-8624-0795		A-8624-0835	70
72	10-89-2724	A-8624-0596			10-89-9727	A-8624-0676	10-89-9728	A-8624-0716		A-8624-0756		A-8624-0796		A-8624-0836	72
74	10-89-2744	A-8624-0597			10-89-9747	A-8624-0677	10-89-9748	A-8624-0717		A-8624-0757		A-8624-0797		A-8624-0837	74
76	10-89-2764	A-8624-0598			10-89-9767	A-8624-0678	10-89-9768	A-8624-0718		A-8624-0758		A-8624-0798		A-8624-0838	76
78	10-89-2784	A-8624-0599			10-89-9787	A-8624-0679	10-89-9788	A-8624-0719		A-8624-0759		A-8624-0799		A-8624-0839	78
80	10-89-2804	A-8624-0600			10-89-9807	A-8624-0680	10-89-9808	A-8624-0720		A-8624-0760		A-8624-0800		A-8624-0840	80

LTR.	REVISIONS	LTR.	REVISIONS
		G	SEE SHEET 1
		F	SEE SHEET 1
		E	SEE SHEET 1
		D1	SEE SHEET 1
L1	SEE SHEET 1	C	SEE SHEET 1
J	SEE SHEET 1	B	SEE SHEET 1
I	SEE SHEET 1	A	SEE SHEET 1

DIMENSIONS SHOWN (METRIC) INCH

UNLESS OTHERWISE SPECIFIED TOLERANCES: ANGULAR = 1/2°

	INCH	METRIC
3 PLACE	±	
2 PLACE	±	±
1 PLACE		±

DRAFT WHERE APPLICABLE MUST REMAIN WITHIN DIMENSIONS

DRAWN BY EJK | CHK'D BY EJK | APPR'D BY WAZ | SCALE :

▽ : 0 ▼ : 0 REVISE ONLY ON CAD SYSTEM

TITLE SALES ASSY-DUAL ROW WAFER W/BREAK-OFF OPTION .025 SQ. PINS/.100 GRID

MOLEX INCORPORATED 2222 WELLINGTON CT. LISLE, ILL. 60532 U.S.A.

SHEET NO. 4 | DATE 08/15/88

PART NO. SEE CHART | DRWG. NO. SDA-8624-0001-5000

FILE NAME S8624X4

THIS DRAWING CONTAINS INFORMATION THAT IS PROPRIETARY TO MOLEX INC AND SHOULD NOT BE USED WITHOUT WRITTEN PERMISSION

DIV. DA | SIZE C