FOXCONN®

SPECIFICATIONS

Modular Jack

JM Series
RJ45 1X1
R/A T/H Type
PASSIVE

Mechanical

Mating Force: *5Pounds max.*
Unmating Force: 10*Pounds max.*
Durability: *1000 Cycles*

Electrical

Voltage Rating: *150VAC*
Current Rating: *1.5A max.*
Contact Resistance: *30mΩ max.*
Dielectric Withstanding Voltage: *1000VDC*
Insulation Resistance: *500MΩ min.*

Physical

Housing:*Thermoplastic, UL 94V-0 Molded Black*
Contact: *Phosphor Bronze*
Shell: *NA*
Operating Temperature: *0℃ to +70℃*

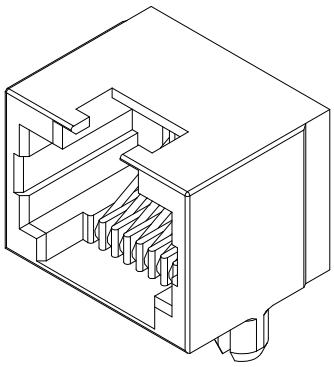

DRAWING

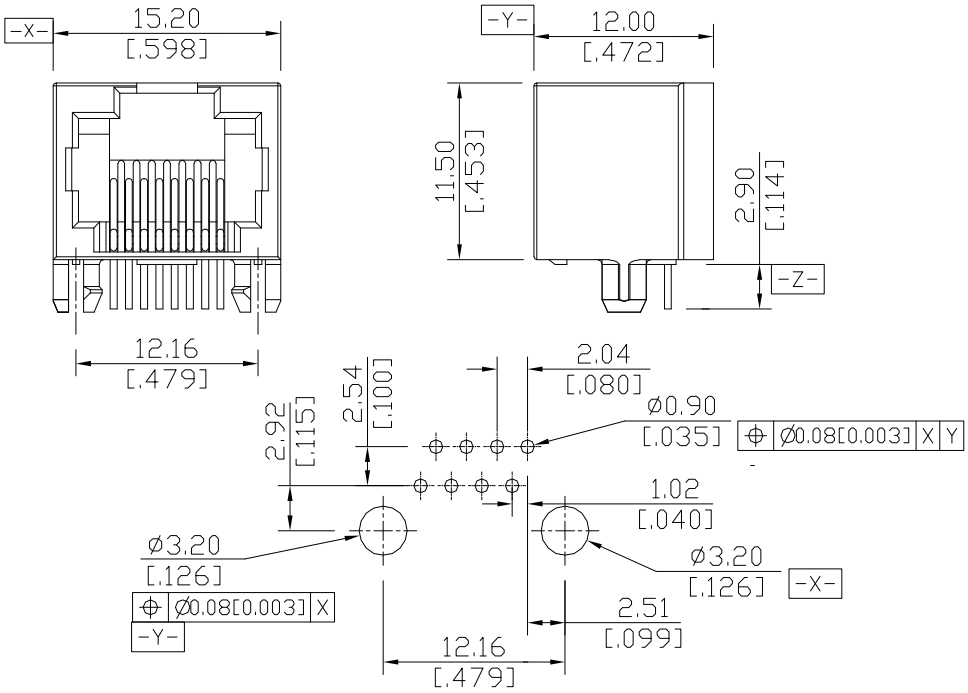

RECOMMENDED PCB LAYOUT

ORDERING INFORMATION

PRODUCT NO.: J M 1 6 1 1 1 - KN01 - 4 F

- Series Prefix: JM=Modular Jack
- Protocol Type: 1=R/A All PLASTIC T/H
- DESIGN TYPE: 6=W/O PANEL-GND, W/B/L
- Positon Type: 1=8P8C
- Configuration: N=1X1 TYP
- Gold Plating: 1=6u" GOLD
- Extension Code:
- Package type: 4=Soft Tray
- Lead Free Code: F= Lead Free

All specification & dimensions are subject to change, please call your nearest Foxconn sales representative for update information.