REVISION W

DO NOT SCALE FROM THIS PRINT

TABLE 1

STYLE	TERMINAL	"A"	"B"	"C"	"D"	"E"	"F"
-01	T-1S8-01-T	.175 [4.45]	.450 [11.43]	N/A	N/A	.213 [5.41]	.412 [10.46]
-02	T-1S8-02-T	.175 [4.45]	.500 [12.70]	.100 [2.54]	.175 [4.45]	.213 [5.41]	.462 [11.73]
-04	T-1S8-04-T	.156 [3.96]	.809 [3.96]	.195 [4.95]	.156 [3.96]	.213 [5.41]	.752 [19.10]
-05	T-1S8-05-T	.156 [3.96]	1.069 [27.15]	.195 [4.95]	.156 [3.96]	.213 [5.41]	1.012[25.70]

W

HFWJ-XX-XX-XX-X-XX-X

No OF POSITIONS
-01 THRU -24

LEAD STYLE
SEE TABLE 1

PLATING SPECIFICATION
-T: TIN (USE T-1S8-XX-T)
-TM: MATTE TIN
(USE T-1S8-XX-T)

ROW SPECIFICATION
-S: SINGLE (USE HFWJ-24-156)
LEAD STYLES 01, 02, & 04.

OPTION
-RA: RIGHT ANGLE (POST)
(N/A WITH -VS OPTION)
-VS: VERTICAL SURFACE MOUNT
(N/A ON -01 POSITION)

OPTION
-P: PICK & PLACE PAD
(USE PPP-47, SEE FIG. 2)
(-VS ONLY, 3 POSITION MIN.)

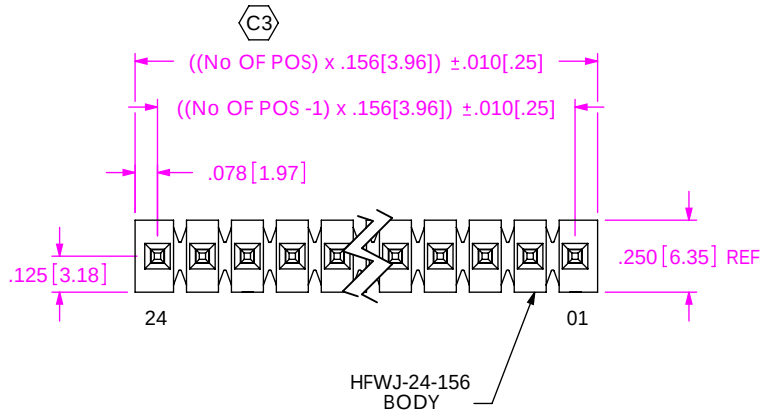

NOTES:
1. MAX PIN ROTATION IN BODY : 2 DEGREES
2. MINIMUM PUSHOUT FORCE: .5 LB.
3. BURR ALLOWANCE: .0015 MAX.
4. STANDARD & -RA PARTS TO BE BULK PACKAGED.
5. SURFACE MOUNT (-VS) TO BE PACKAGED AS FOLLOWS:
   POSITIONS -04 THRU -20 TO BE TUBE PACKAGED.
   POSITIONS -02 & -03 TO BE LAYER PACKAGED.
6. MAXIMUM CUT FLASH: .020.
7. MAX HEIGHT VARIATION BETWEEN PINS: .005[.13]
8. POSITIONS -02 THRU -16 TO BE .008[.20]
   POSITIONS -17 THRU -24 TO BE .010[.25]
9. Ⓒ REPRESENTS A CRITICAL DIMENSION.
10. -01 POSITION PARTS TO BE BULK PACKAGED.
11. BANDOLIER AREA ON T-1S8 MUST NOT BE ENTIRELY LOCATED IN THE CONTACT AREA. POSITION ABOUT OR TOWARDS STANDOFF SIDE OF BODY.
12. BANDOLIER AREA MUST NOT BE LOCATED IN CONTACT AREA.

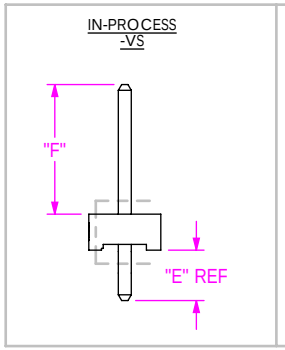

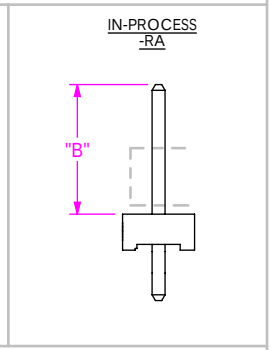

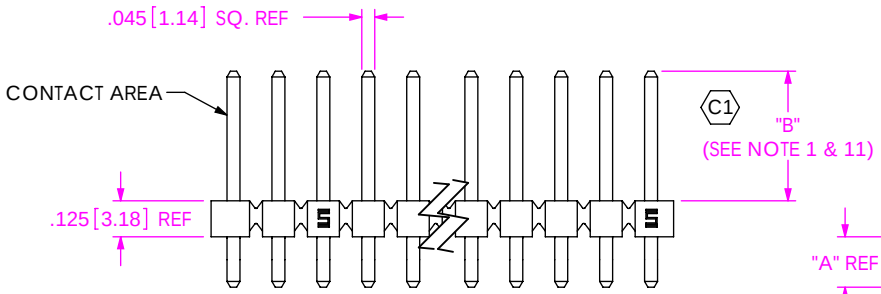

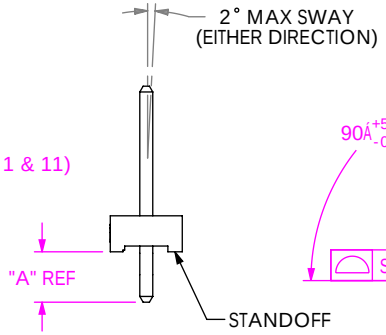

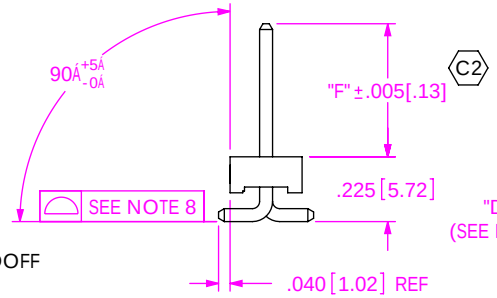

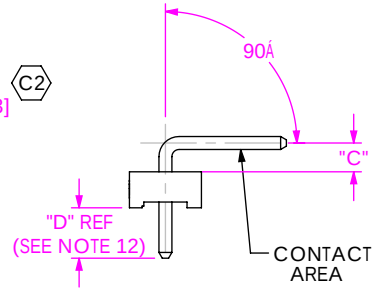

PACKAGING VIEW

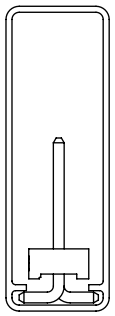

TUBE: PT-HPW001-P
PLUG: TP-26
(SEE NOTE 5)

FIG. 2
-P: PICK & PLACE PAD OPTION
(-VS ONLY, 3 POS. MIN)

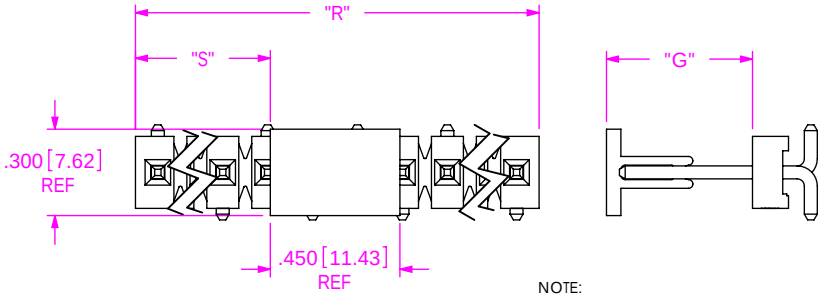

NOTE:
"R" = No OF POS x .156[3.96] REF
"S" = {("R" - .450[11.43]) / 2} ±.020[12.90]

UNLESS OTHERWISE SPECIFIED, DIMENSIONS ARE IN INCHES.
TOLERANCES ARE:
DECIMALS
.XX: ±.01 [.3]
.XXX: ±.005 [.13]
.XXXX: ±.0020 [.051]
ANGLES
2°

PROPRIETARY NOTE
THIS DOCUMENT CONTAINS INFORMATION CONFIDENTIAL AND PROPRIETARY TO SAMTEC, INC. AND SHALL NOT BE REPRODUCED OR TRANSFERRED TO OTHER DOCUMENTS OR DISCLOSED TO OTHERS OR USED FOR ANY PURPOSE OTHER THAN THAT WHICH IT WAS OBTAINED WITHOUT THE EXPRESSED WRITTEN CONSENT OF SAMTEC, INC.

samtec
520 PARK EAST BLVD, NEW ALBANY, IN 47150
PHONE: 812-944-6733 FAX: 812-948-5047
e-Mail: info@SAMTEC.com code: 55322

MATERIAL: DO NOT SCALE DRAWING SHEET SCALE: 1.5:1

INSULATOR: VECTRA E130i, COLOR: NATURAL
CONTACT OR TERMINAL: PHOS BRONZE, 510

MAX FLASH ALLOWED: .002
MAX GATE VESTIGE: .002

F:\DWG\MISC\Mktg\HFWJ-XX-XX-XX-X-XX-X-MKT.SLDDRW

DESCRIPTION:
.156[3.96] PWER BLOCK ASSEMBLY

DWG. NO.
HFWJ-XX-XX-XX-X-XX-X

BY: T.WERNE 06/06/2002 SHEET 1 OF 1