C702A Smart Card Connectors Standard Style Push-Only

Description	Contact position	Part No.
Push-Only	ISO	C702 10M008 018 2

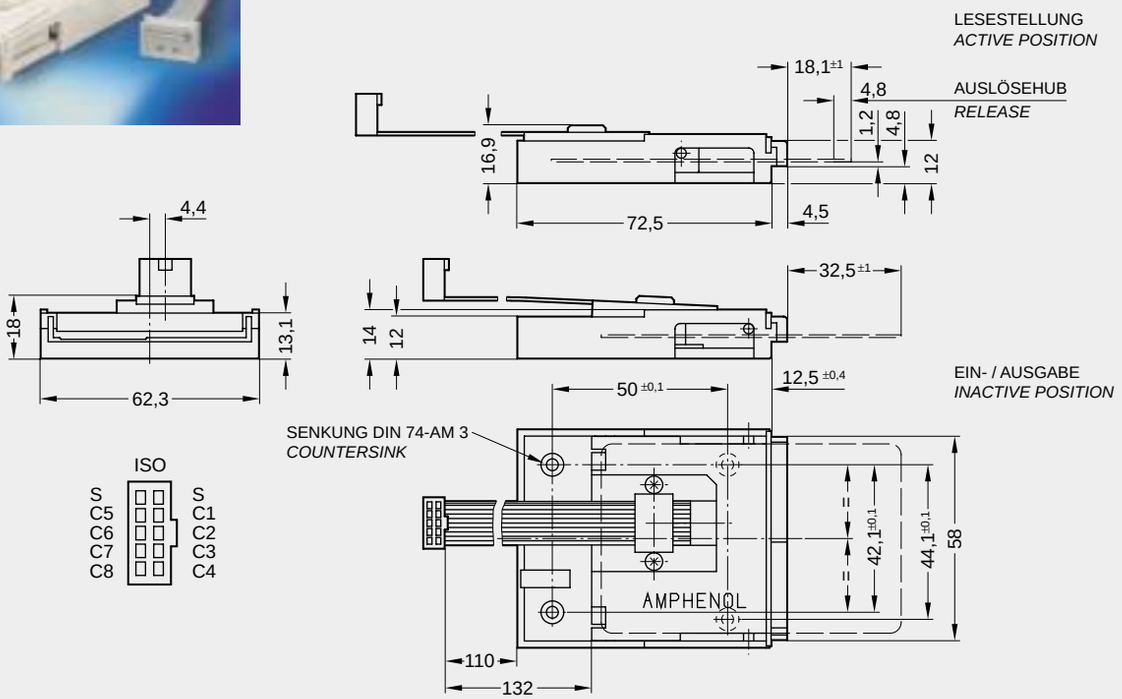

C702A Smart Card Connectors Standard Style Push-Pull

Description	Contact position	Additional information	Part No.
Push-Pull	ISO Standard		C702 10M008 514 2
	AFNOR		C702 10M008 522 2
	ISO + AFNOR	Contacts in series	C702 10M008 521 2
	ISO + AFNOR	Contacts in parallel	C702 10M008 523 2

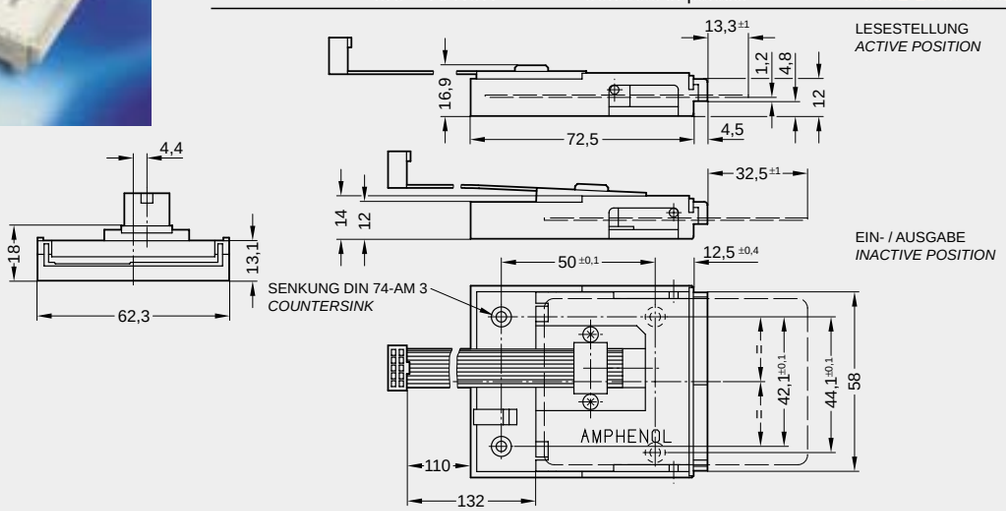

Belegung Steckverbinder *Connector termination*

ISO	ISO + AFNOR Kontakte in Reihe / *Contacts in series*	AFNOR	ISO + AFNOR Kontakte parallel / *Contacts in parallel*
S C5 C6 C7 C8 — S C1 C2 C3 C4	S C4 C3 C2 C1 — S C8 C7 C6 C5	S C4 C3 C2 C1 — S C8 C7 C6 C5	ISO: S C4 C3 C2 C1 — S C8 C7 C6 C5 AFNOR: C5 C6 C7 C8 — C1 C2 C3 C4 S nc — S nc nc = frei *not connected*