Rev	AWO #	Description	Date	Appr
-		RELEASED	2/9/06	

APPROVED: _____

DATE: _____ TITLE: _____

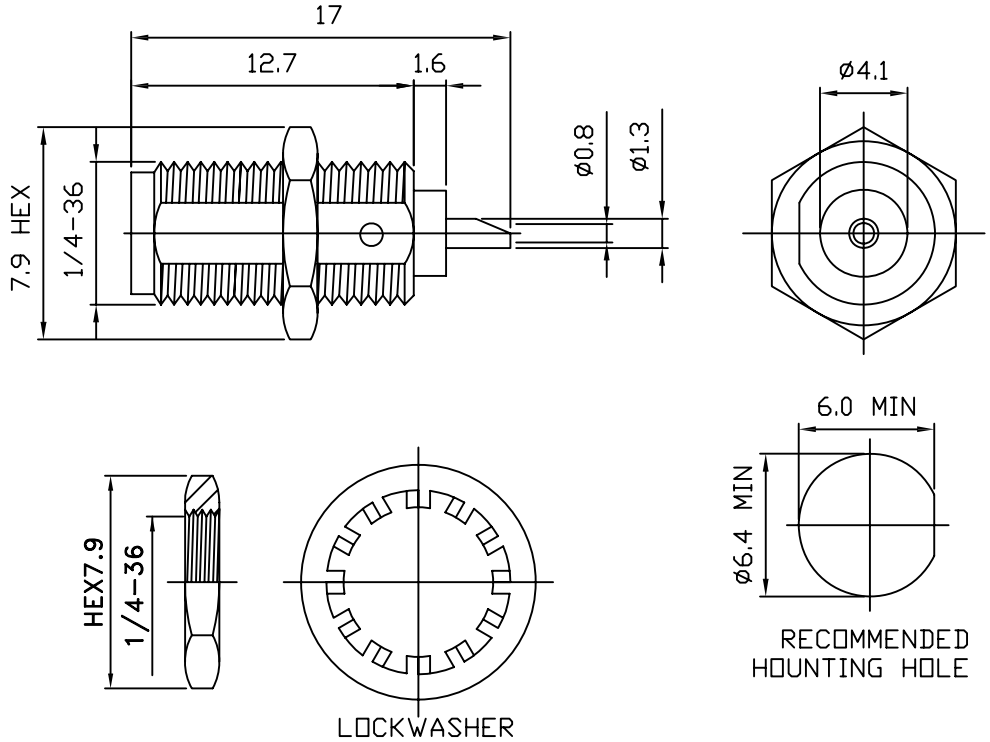

NO	DESCRIPTION	MATERIAL	FINISH	QTY
5	NUT	BRASS	GOLD	1
4	LOCKWASHER	BRASS	GOLD	1
3	DIELECTRIC	TEFLON	WHITE	1
2	PIN	BERYLLIUM COPPER	GOLD	1
1	BODY	STAINLESS STEEL	GOLD	1

SPECIFICATIONS
Environmental:
Lead free, RoHS compliant.

RoHS COMPLIANT

UNLESS OTHERWISE SPECIFIED
ALL DIMENSIONS ARE MM [INCHES]
TOLERANCES: EXCEPT AS NOTED

INCHES		HOLES	
.X	± .10	Ø.X	±.10
.XX	± .020	Ø.XX	±.015
.XXX	± .015	Ø.XXX	±.010

APPROVALS		DATE
DRAWN	SS	2/9/06
CHECKED		
APPROVED		

ADAM TECH
909 Rahway Avenue, Union, NJ 07083
Phone: 908-687-5000 Fax: 908-687-5710

TITLE
SMA FEMALE BULKHEAD

SIZE	PART NO.	REV.
X	RF2-34-T-00-50-G	-

REF: | SCALE: NTS | SHEET 1 OF 1