DATA SHEET

Part No.	AN41902A
Package Code No.	HQFP048-P-0707

Maintenance/Discontinued
Maintenance/Discontinued includes following four product lifecycle stage.
planed maintenance type
maintenance type
planed discontinued type
discontinued type
Please visit following URL about latest information.
http://www.semicon.panasonic.co.jp/en/

Contents

■ Overview 3
■ Features 3
■ Applications 3
■ Package 3
■ Type 3
■ Application Circuit Example 4
■ Block Diagram 5
■ Pin Descriptions 6
■ Absolute Maximum Ratings 8
■ Operating Supply Voltage Range 8

Maintenance/Discontinued includes following four Product lifecycle stage.
planed maintenance type
maintenance type
planed discontinued typed
discontinued type
Please visit following URL about latest information.
http://www.semicon.panasonic.co.jp/en/
Maintenance/ Discontinued

AN41902A

Lens Motor Driver IC

Maintenance/Discontinued
Maintenance/Discontinued includes following four Product lifecycle stage.
planed maintenance type
maintenance type
planed discontinued typed
discontinued type
Please visit following URL about latest information.
http://www.semicon.panasonic.co.jp/en/

■ Overview

The AN41902A is a four channels H-bridge driver IC which interface block consists of CMOS circuit.
The AN41902A consumes less-power than conventional drivers that use bipolar transistors.

■ Features

- Current feedback 64-step microstepping drive
- Motor control with a bidirectional 3-wire serial interface
- Possible to set the output current value, the pulse period, pulse count and possible to read excitation position information.

■ Applications

- Lens motor driver for digital cameras and digital camcorders
- Stepping motor drive

■ Package

- 48-pin plastic quad flat package (QFP type) with heat slug

■ Type

- Silicon monolithic bipolar IC

■ Application Circuit Example

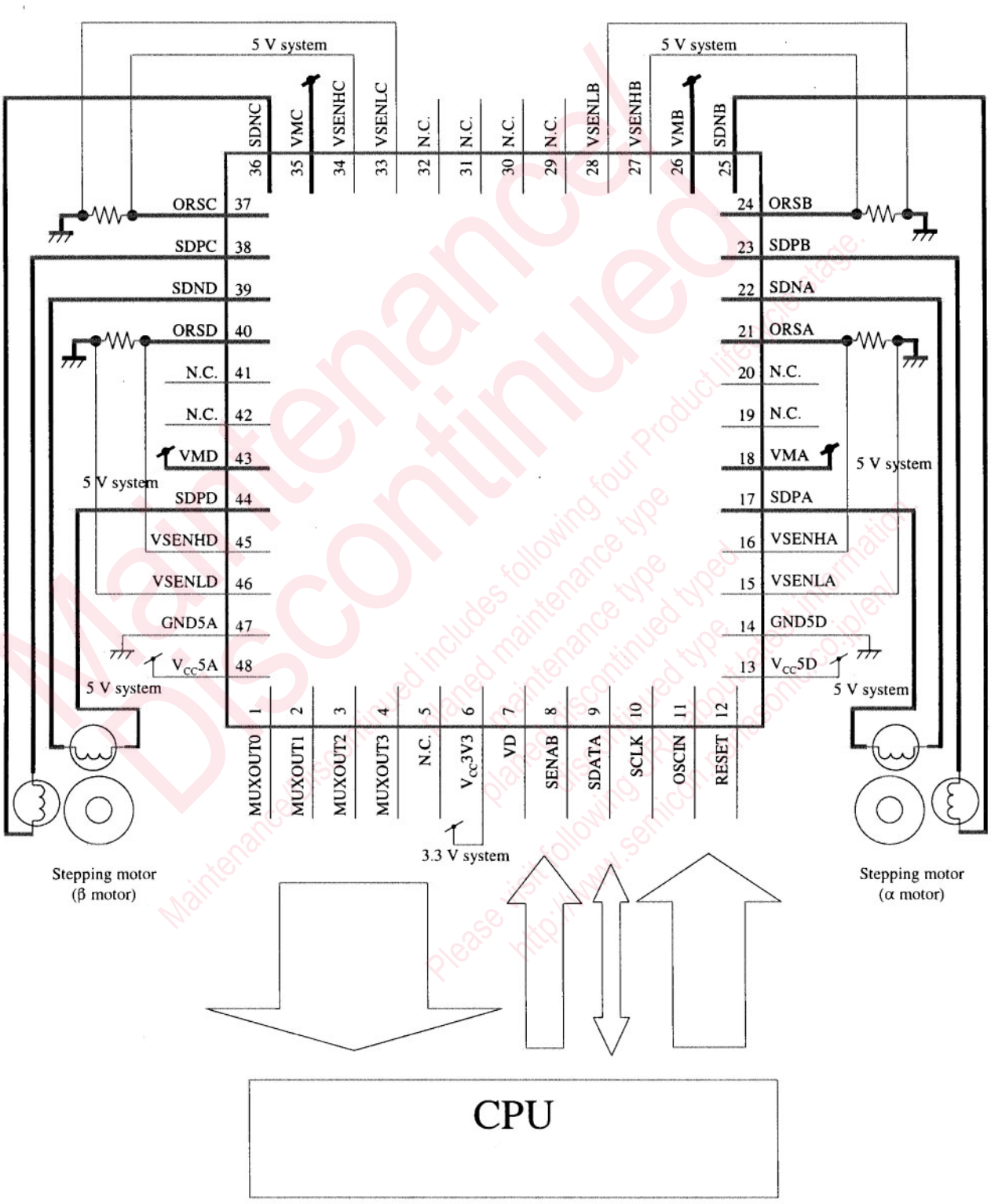

Maintenance/ Discontinued
Maintenance/Discontinued includes following four Product life-cycle stage.
planned maintenance type
maintenance type
planned discontinued type
discontinued type
Please visit following URL about latest information.
http://www.semicon.panasonic.co.jp/en/

■ Block Diagram

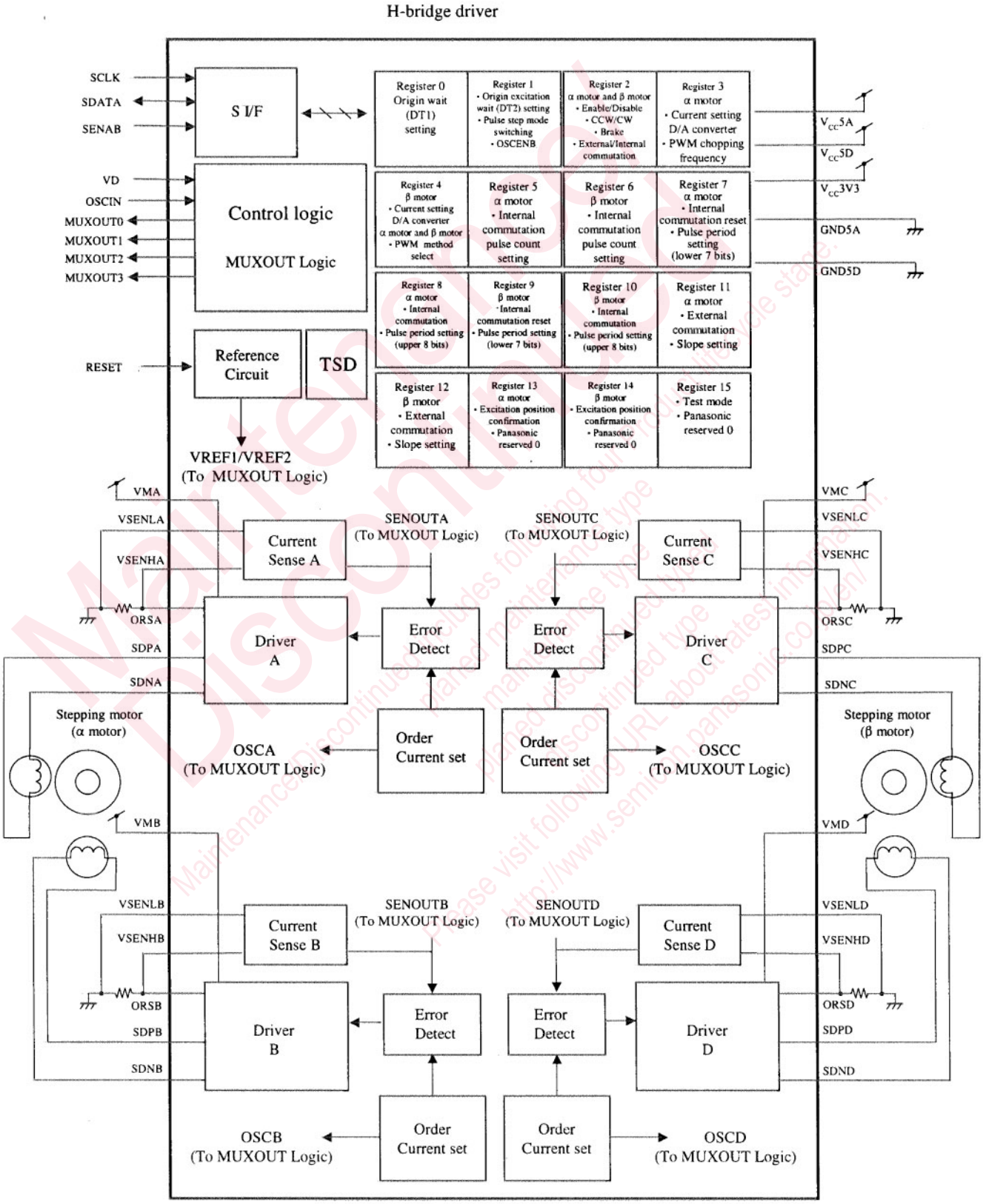

Maintenance/Discontinued
Maintenance/Discontinued includes following four product life cycle stage: planed maintenance type, maintenance type, planed discontinued type, discontinued type
Please visit following URL about latest information. http://www.semicon.panasonic.co.jp/en/

■ Pin Descriptions

Pin No.	Pin name	Type	Description
1	MUXOUT0	O	Analog voltage monitor output 0
2	MUXOUT1	O	Analog voltage monitor output 1
3	MUXOUT2	O	Analog voltage monitor output 2
4	MUXOUT3	O	Analog voltage monitor output 3
5	N.C.	—	N.C.
6	V_{CC}3V3	—	3.3 V digital power supply
7	VD	I	Video sync signal input
8	SENAB	I	Serial port select (Active low)
9	SDATA	I/O	Serial port input data
10	SCLK	I	Serial port input clock
11	OSCIN	I	Control oscillator input
12	RESET	I	Reset signal input
13	V_{CC}5D	—	5 V digital power supply
14	GND5D	—	Digital ground
15	VSENLA	I	Channel A – input of sense amplifier
16	VSENHA	I	Channel A + input of sense amplifier
17	SDPA	O	Channel A + output of H-bridge driver
18	VMA	—	Channel A motor power supply
19	N.C.	—	N.C.
20	N.C.	—	N.C.
21	ORSA	O	Channel A motor current detection
22	SDNA	O	Channel A – output of H-bridge driver
23	SDPB	O	Channel A + output of H-bridge driver
24	ORSB	O	Channel B motor current detection
25	SDNB	O	Channel B + output of H-bridge driver
26	VMB	—	Channel B motor power supply
27	VSENHB	I	Channel B + input of sense amplifier
28	VSENLB	I	Channel B – input of sense amplifier
29	N.C.	—	N.C.
30	N.C.	—	N.C.
31	N.C.	—	N.C.
32	N.C.	—	N.C.
33	VSENLC	I	Channel C – input of sense amplifier
34	VSENHC	I	Channel C + input of sense amplifier
35	VMC	—	Channel C motor power supply

Maintenance/Discontinued
Discontinued
Please visit the following URL about latest information.
http://www.semicon.panasonic.co.jp/en/

■ Pin Descriptions (continued)

Pin No.	Pin name	Type	Description
36	SDNC	O	Channel C – output of H-bridge driver
37	ORSC	O	Channel C motor current detection
38	SDPC	O	Channel C + output of H-bridge driver
39	SDND	O	Channel D – output of H-bridge driver
40	ORSD	O	Channel D motor current detection
41	N.C.	—	N.C.
42	N.C.	—	N.C.
43	VMD	—	Channel D motor power supply
44	SDPD	O	Channel D + output of H-bridge driver
45	VSENHD	I	Channel D + input of sense amplifier
46	VSENLD	I	Channel D – input of sense amplifier
47	GND5A	—	Analog ground
48	V_{CC}5A	—	5 V analog power supply

Maintenance/Discontinued
Maintenance/Discontinued includes following four Product lifecycle stage.
planed maintenance type
maintenance type
planed discontinued type
discontinued type
Please visit following URL about latest information.
http://www.semicon.panasonic.co.jp/en/

■ Absolute Maximum Ratings

A No.	Parameter	Symbol	Rating	Unit	Notes
1	Control block supply voltage	V_{CC}3V3	– 0.3 to +4.5	V	*1
2	Motor control block supply voltage	V_{CC}5A	– 0.3 to +6	V	*1
3	Motor drive block supply voltage	V_{CC}5D VM(A,B,C,D)	– 0.3 to +6	V	*1
4	Power dissipation	P_D	354.6	mW	*2
5	Operating ambient temperature	T_{opr}	–10 to +75	°C	*3
6	Storage temperature	T_{stg}	–55 to +125	°C	*3
7	H-bridge drive current	$I_{M(CD)}$	±0.25	A/ch	
8	Instantaneous H-bridge drive current	$I_{M(pulse)}$	±0.4	A/ch	
9	Digital signal input voltage	V_{IN}	– 0.3 to V_{CC}3V3 + 0.3	V	

Notes) *1 : The values under the condition not exceeding the above absolute maximum ratings and the power dissipation.

*2 : The power dissipation shown is the value at T_a = 85°C for the independent (unmounted) IC package with out a heat sink.

*3 : Except for the power dissipation, operating ambient temperature, and storage temperature, all ratings are for T_a = 25°C.

■ Operating supply voltage range

Parameter	Symbol	Rangs			Unit	Notes
		Min	Typ	Max		
Supply voltage range	V_{CC}3V3	2.7	3.3	3.9	V	
	V_{CC}5A	3.0	5.0	5.5		
	V_{CC}5D VM(A,B,C,D)	3.0	5.0	5.5		

Note) * : The values under the condition not exceeding the above absolute maximum ratings and the power dissipation.

Maintenance/Discontinued
Please visit following URL about latest information.
http://www.semicon.panasonic.co.jp/en/

Request for your special attention and precautions in using the technical information and semiconductors described in this book

(1) If any of the products or technical information described in this book is to be exported or provided to non-residents, the laws and regulations of the exporting country, especially, those with regard to security export control, must be observed.

(2) The technical information described in this book is intended only to show the main characteristics and application circuit examples of the products, and no license is granted under any intellectual property right or other right owned by our company or any other company. Therefore, no responsibility is assumed by our company as to the infringement upon any such right owned by any other company which may arise as a result of the use of technical information described in this book.

(3) The products described in this book are intended to be used for standard applications or general electronic equipment (such as office equipment, communications equipment, measuring instruments and household appliances).
Consult our sales staff in advance for information on the following applications:
- Special applications (such as for airplanes, aerospace, automobiles, traffic control equipment, combustion equipment, life support systems and safety devices) in which exceptional quality and reliability are required, or if the failure or malfunction of the products may directly jeopardize life or harm the human body.
- Any applications other than the standard applications intended.

(4) The products and product specifications described in this book are subject to change without notice for modification and/or improvement. At the final stage of your design, purchasing, or use of the products, therefore, ask for the most up-to-date Product Standards in advance to make sure that the latest specifications satisfy your requirements.

(5) When designing your equipment, comply with the range of absolute maximum rating and the guaranteed operating conditions (operating power supply voltage and operating environment etc.). Especially, please be careful not to exceed the range of absolute maximum rating on the transient state, such as power-on, power-off and mode-switching. Otherwise, we will not be liable for any defect which may arise later in your equipment.
 Even when the products are used within the guaranteed values, take into the consideration of incidence of break down and failure mode, possible to occur to semiconductor products. Measures on the systems such as redundant design, arresting the spread of fire or preventing glitch are recommended in order to prevent physical injury, fire, social damages, for example, by using the products.

(6) Comply with the instructions for use in order to prevent breakdown and characteristics change due to external factors (ESD, EOS, thermal stress and mechanical stress) at the time of handling, mounting or at customer's process. When using products for which damp-proof packing is required, satisfy the conditions, such as shelf life and the elapsed time since first opening the packages.

(7) This book may be not reprinted or reproduced whether wholly or partially, without the prior written permission of Matsushita Electric Industrial Co., Ltd.

Maintenance/Discontinued
Maintenance/Discontinued includes following Products
planed maintenance type
maintenance type
planed discontinued type
discontinued type
Please visit following URL about latest information.
http://www.semicon.panasonic.co.jp/en/