SHEET OF

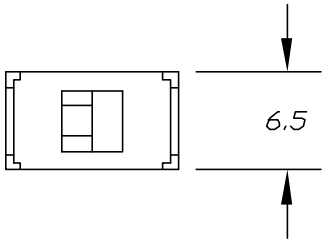

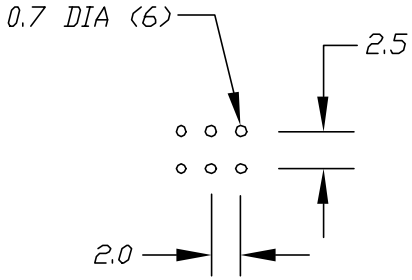

RECOMMEND P.C.B. HOLES

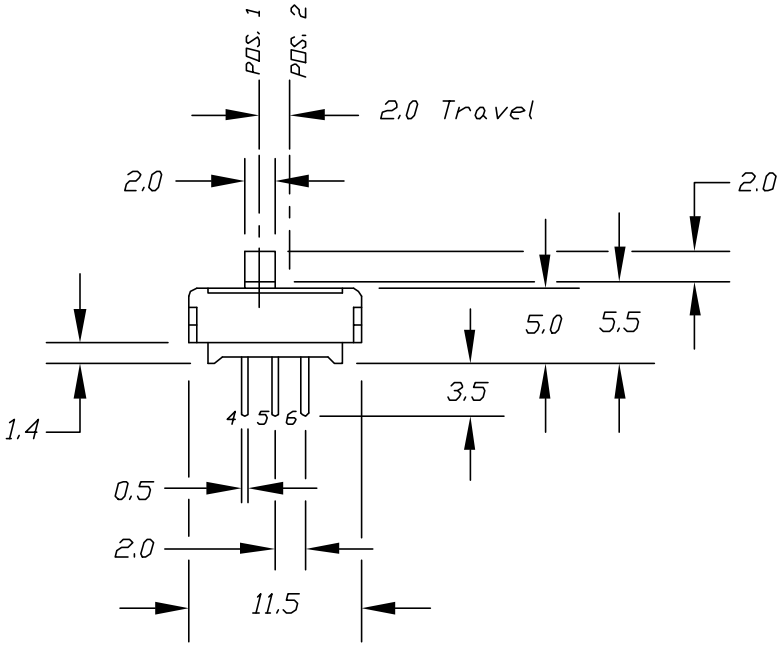

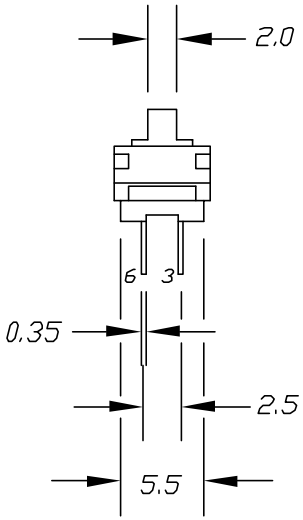

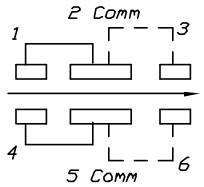

CONTACT CONFIGURATION

CIRCUIT: DPDT

SWITCH FUNCTION	
POS. 1	POS. 2
2-1,5-4	2-3,5-6

NOTES:

1. ALL DIMENSIONS IN MM
2. TERM. NOS. FOR REF ONLY

REV.	DESCRIPTION	DATE	CHKD
B	REVISE & REDRAWN		

THE INFORMATION CONTAINED IN THIS DOCUMENT IS PROPRIETARY TO E-SWITCH AND IS NOT TO BE COPIED OR TRANSFERRED

TOLERANCES: 0.0 ±0.4 | 0.00 ±0.25

E-SWITCH

TITLE: EG 2209

SCALE	DATE	DR	DWG	REV
2:1	5/11/94	MM	P040120	B