SHEET OF

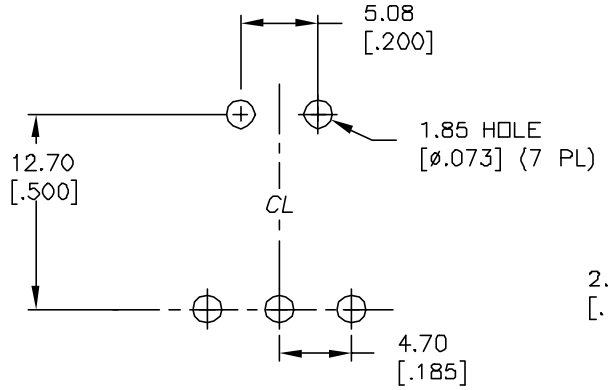

RECOMMENDED PCB LAYOUT

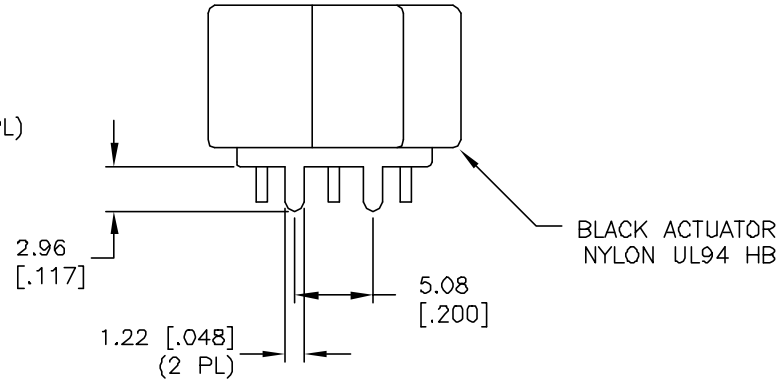

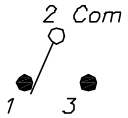

CIRCUIT: SPST

SWITCH FUNCTION		
POS. 1	POS. 2	POS. 3
ON	NONE	ON
2-3	OPEN	2-1

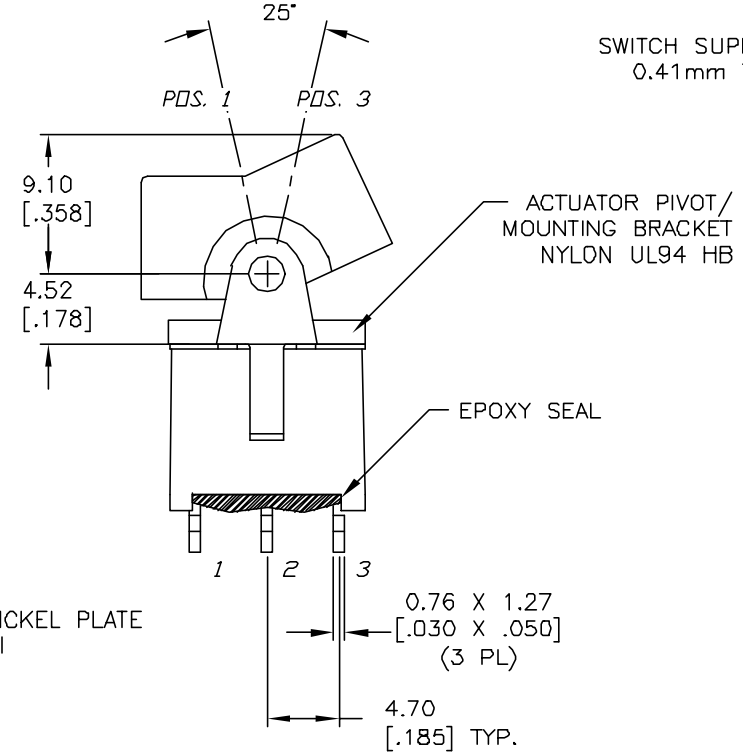

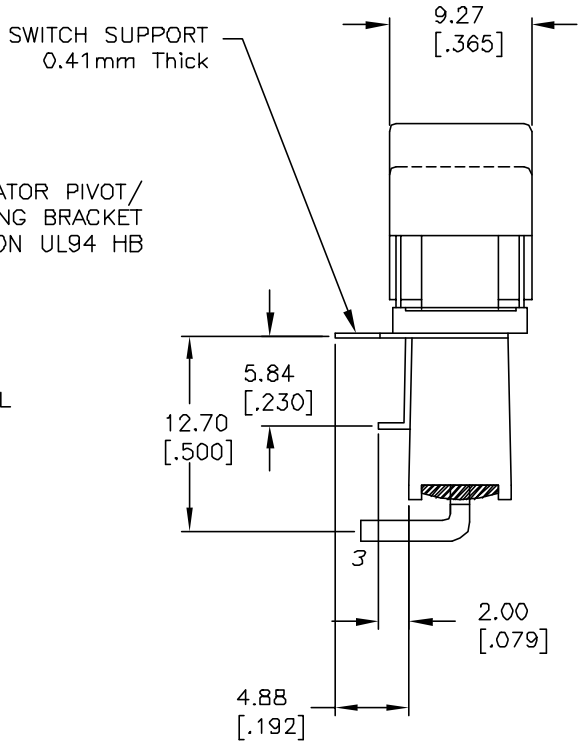

NOTES:

1. ALL DIMENSIONS IN MM [INCH]
2. GENERAL TOLERANCE: X.X=±0.4
   X.XX=±0.25
3. TERM. NOS. FOR REF. ONLY
4. RATING: 0.4 VA MAX. @ 20V MAX AC OR DC
5. MATERIAL: FIXED TERMINAL & MOVING CONTACT
   COPPER ALLOY W/ GOLD PLATE OVER NICKEL PLATE
6. CONTACT RESISTANCE: 10mILLI Ohms max initial
   @2-4VDC, 100mA for AG & AU
7. ELECTRICAL LIFE: 30,000 make-and-break
   cycles at full load.
8. INSULATION RESISTANCE: 1,000M ohm min.
9. DIELECTRIC STRENGTH: 1000V RMS @sea level
10. OPERATING TEMP.: -30°C to 85°C

REV.	ECN No.	DESCRIPTION	DATE	CHKD
A	11731	RELEASED FOR PRODUCTION	10/11/01	CJC

THE INFORMATION CONTAINED IN THIS DOCUMENT
IS PROPRIETARY TO E-SWITCH AND IS
NOT TO BE COPIED OR TRANSFERRED

E-SWITCH®

TITLE 300A WSP-1 J1 BLK M6 R E

SCALE	DATE	DR	DWG	REV
2:1	10/11/01	CJC	T301029	A